Digital Arc Voltage Height Controller

Operation Manual (V2.3)

（F162X Series（Including F1620, F1621， F1627D, F1627S,

F1628D, F1628S,F1629D））

Shanghai Jiaoyi CNC Equipment Co., Ltd.
2021-02

Version No.	Date	Page	Content
V1.0	72012/10/10	All	Initial version
V1.1	2014/09/23	All	
V1.2	2015/01/05	All	
V1.3	2016/04/13	All	
V1.4	2017/02/17	All	Add system version no. interface
V1.5	2017/03/01	All	Add description of F1628 height controller
V1.6	2018/10/16	All	Add instructions for F1628S height controller Revise the original F1628 model to F1628D. Add description of F1627D, F1627S height controller
V1.7	2019/05/22	22	Add instructions for dynamic punching
V1.8	2019/08/20	All	Add description of F1621 height controller
V1.9	2019/9/02	All	Add “magnetic ring + Shielded wire” in wiring diagram Revise F1627/8 chassis view Revise F1627/8 general wiring diagram
V2.0	2019/11/16	All	Modify the front view of the F1628 panel. Add the CAN Bus connection between F1627 and F2000.
V2.1	2019/12/16	All	Add the instruction for “Height mode”.
V2.2	2020/3/19	All	Add the instruction for F1629D.
V2.2	2020/4/13		Add the instruction for Multiple THC I/O synchronize signal
V2.3	2021/2/03		Add the wiring diagram for Multiple THC Synchronize signal. Modify the wiring diagram to F2000 Series(Remove PE)

Precautions

Manual

This manual is applicable to F162X series digital arc voltage height controller produced by Shanghai Jiaoyi CNC Equipment Co., Ltd. Please read the instruction manual and local safety regulations carefully before using.

Note:

1) Due to the continuous improvement of this product, technical parameters and hardware parameters involved in this manual are subject to change without prior notice. If you have other questions or opinions about this product and the contents of this manual are not fully detailed, please make timely inquiries, and we will be happy to answer your questions, suggestions and criticisms. Thank you again for your choice and trust.

2) The design of this product is not suitable for on-site maintenance. If you have any maintenance requirements, please contact or return to the after-sales service (Shanghai) center of Shanghai Jiaoyi CNC Equipment Co., Ltd.:

Address: Room 713 (200240), Kangbokechuang (formerly Mehom) Building, No. 955 Jianchuan
Road, Minhang District, Shanghai
Tel: 021-3421295 Fax: 021-34290970

E-mail：support@flcnc.com

Environmental requirements

The height controller is suitable to work at ambient temperature of 0 ℃ to 50 ℃, relative humidity of 5-95% without condensation.

Operating voltage: RatedVoltage: 24VDC (24V DC).Maximumrange: DC 21.6V—26.4V.

The height controller shall be installed in the console housing with dust protection.

It is best to use the height controller far away from high voltage, high frequency and high radiation.

Maintenance

This equipment should and can only be operated by trained personnel.

Not authorized technicians of the company, it is strictly prohibited to dismantle the machine independently.

When using, do not splash acidic, alkaline, corrosive and other items onto the height controller and the voltage divider.

When not in use, please turn off the power supply of the height controller in time.

Safety precautions

This equipment will be connected with high voltage. Careless contact with the high voltage part will cause personal injury and death. Do not touch wires and cables when the power is on.

Installation must be carried out according to the procedures and requirements specified in the packing case.

The terminals marked as grounded by the height controller must be well grounded.

Precautions

Safety inspection for the first power-on of the height controller: Before the height controller is powered on for the first time, connect all the wiring of each port, and then unplug the motor cable, i.e. temporarily disconnect the lifting motor cable. Then power on and start. (Note: Always unplug the motor cable before powering on, otherwise, after powering on, the lifting motor may up (fall) all the time due to receiving collision signals, which may damage the lifting motor in serious cases)

Check whether the collision detection function is normal: after the power is applied to the height controller, adjust the collision detection signal to work normally, and process according to the following process:

1) When the proximity switch is used to detect collision, the parameter P13 should be set to 1, indicating that the proximity switch is allowed to detect collision signals.

2) Ensure that the plasma cutting torch does not collide with the steel plate, that is, the proximity switch and the protective cap are in a collision-free state. At this time, the collision detection LED indicates that it should be turned off (F1620, F1628D, F1628S), and the collision detection signal of the diagnostic interface is invalid (F1627D, F1627S).

3) Human triggering causes collision (when the protective cap is positioned, the cutting torch protective cap contacts the cutting steel plate. When the proximity switch is positioned, disengage the proximity switch from the gripper sensing position). At this time, the collision detection LED (or collision detection signal in diagnosis) should be lit.

4) If the logic of the signal indicator lamp in the above 2) and 3) is inverted, the L09 parameter needs to be inverted (originally set to 0, it is changed to 1, originally set to 1, it is changed to 0).

Safe access to the lifting motor: After the collision detection function of the height controller is adjusted and can be used normally, please remove all collision conditions. At this time, the collision indicator of the height controller should be turned off. Then cut off the power of the height controller and connect the lifting motor cable.

Check whether the movement direction of the up body is correct: operate the motor to ascend or descend, and observe the actual direction of the cutting torch. If the direction of the motor is opposite to the operation direction, it is also possible to interchange the two cables of the lifting motor. Or please reverse the setting of P12 (i.e. change from 0 to 1 and from 1 to 0).

Check arcing and positioning function: use the [Arcing Test] to check whether arcing is possible. Use the [Positioning Test] to check whether the initial positioning can be completed.

Correct connection of arc voltage cable: plasma arc voltage lead-in wire and collision detection cable must be connected to the corresponding terminals accurately, and wrong connection will lead to danger.

Requirements for positioning and wiring of protective cap: plasma anode cable must be connected to workpiece before collision detection of protective cap and initial positioning operation of protective cap can be carried out.

Shielded cable connection: in order to protect the normal operation of the equipment, please use shielded cables for all cables of the equipment (including cables from height controller to CNC, motor cables, etc.). The shielding layer of the shielded cable is connected to one side of the height controller and adopts single-point grounding.

Partial voltage ratio of voltage divider: the default partial voltage ratio of voltage divider of this series of height controllers is 100: 1. The effective measuring voltage of the height controller is 0~660V DC(100:1).

Content

Precautions 3
Manual 3
Environmental requirements 3
Maintenance 3
Safety precautions 3
Precautions 3
1.1 Equipment features 7
Chapter 1 Introduction 8
1.1 Equipment introduction 8
1.2 Equipment functions 2
1.3 Technical parameters 4
1.4 Chassis installation dimensions 4
1.4.1 F1620/F1621 model 4
1.4.2 F1627D and F1627S model 5
1.4.3 F1628D and F1628S model 6
1.4.4 F1629D model 7
Chapter 2 System Operation 8
2.1 F162X Series Operation Panel Keys 8
2.1.1 F1620&F1628, F1629 series operation panel keys 8
2.1.2 F1621 series operation panel keys 10
2.2 F162X series operation panel interface 11
2.2.1 Panel operation 11
2.2.2 Work status indicator 12
2.3 F162X series menu operation 12
2.3.1 Menu mode conversion 13
2.3.2 Submenu browsing and modification 13
2.3.3 P Parameter list 14
2.3.4 H status list 23
2.3.5 L Parameter list 24
2.4 Work process 25
2.4.1 Cutting process with initial positioning 25
2.4.2 Cutting process of direct arcing without initial positioning 25
2.4.3 Workflow 26
2.4.4 Dynamic Punching instructions 26
2.4.5 Height mode instruction 27

2.4.6 Two THC I/O synchronize signal 27

Chapter 3 Interface Connection 29

3.1 F162X Wiring Diagram 29

3.1.1 F1620 model controller view 29

3.1.2 F1621 model controller view 30

3.1.3 F1620/F1621 Wiring Diagram 31

3.1.4 F1620 CNC interface 31

3.1.5 Lifting motor, limit switch and power supply 33

3.1.6 Proximity switch and plasma arcing interface 34

3.1.7 Arc voltage and protective cap interface 36

3.2 F1627D(S), F1628D(S), F1629D wiring diagram 38

3.2.1F1627D(S), F1628D(S) controller view 38

3.2.2 F1627D(S), F1628D(S)/F1629D General Wiring Diagram 40

3.2.3 CNC Interface CN1 40

3.2.4 Power supply, DC motor and motor limit interface CN2 40

3.2.5 Stepper motor interface CN6 40

3.2.6 Proximity switch and plasma arcing interface CN3 41

3.2.7 Voltage divider Interface CN4 41

3.2.8 Interface of collision detection circuit for protective cap of sub-platen 42

3.2.9 1628D and F1628S type height controller panel interface 44

3.3 USB port upgrade 45

3.4 Wiring Examples 46

3.4.1F1620 and Shanghai Fangling F2000 series CNC wiring 46

3.4.2 F1620 and Shanghai Fangling F7000 series CNC wiring 47

3.4.3 F1627D/S and Shanghai Fangling F7000 series wiring 48

3.4.4 F1627D/S, F1628D/S, F1629D and Shanghai Fangling F2000 series wiring 48

Chapter 4 FAQ 48

1.1 Equipment features

Table 2 Features of F162X Series Height Controller Equipment

	F1620/F1621	F1627D	F1627S	F1628D/F1629D	F1628S
Chassis	Shielded metal chassis, 60-degree inclined plane installation	Independent host, shielded metal cabinet		Metal chassis Vertical 90 degree operation panel F1629D front panel is bevel	
Panel display	LED displays IO status; Two lines of digital tube display arc voltage and parameters; Rotate to quickly set common parameters	No panel		LED displays IO status; Two lines of digital tube display arc voltage and parameters; Rotate to quickly set common parameters.	
CNC interface	IO docking	IO docking, RS485 or CAN bus docking			
Motor interface	24V DC Motor, 45W	24V DC Motor, 120W	Stepping Servo motor	24V DC Motor, 120W	Stepping/Servo motor
Menu, Parameter display	Operation panel	CNC remote interface		CNC remote interface and operation panel dual display	
Bus communication	Non support	RS485 or CAN			
Double torch synchronization on	Non support	Support (need to use Fangling numerical control corresponding CNC)			
Voltage divider	Built-in voltage divider	Nonsupport			
Other characteristics	USB on-line upgrade, IO customization, dynamic perforation, status observation, etc., quick setting of arc voltage, positioning arc ignition height, perforation time, dynamic perforation height, etc.				

Chapter 1 Introduction

1.1 Equipment introduction

F162X series digital plasma arc voltage height controller is a series of products developed by our company, which are easy to operate, stable in performance, complete in function and high in cost performance, based on the on-site usage of plasma power supply and absorbing the advantages of many arc voltage height controllers at home and abroad. This series of equipment uses the basic constant current characteristic of plasma power supply to detect the change of plasma torch height by detecting the change of plasma arc voltage, so as to control the height between the torch and the work piece in real time. It is suitable for height control of plasma power cutting torch with constant current characteristic or constant current characteristic within a certain voltage range. It is especially suitable for cutting torch height control of various cutting machines.

This series of equipment is light and portable, easy to operate and to use. All keys and knobs are designed with humanity, comfortable and convenient.

Table 1Introduction of F162X Series Height Controller

Model	Operation panel	Motor	Front 45° view	Back 45° view
F1620	Have	24V DC Motor, 45W		
F1621	Have	24V DC Motor, 45W		
1627D	None, CNC display only	24V DC Motor, 120W		
F1627S	None, CNC display only	Pulse + Direction (Step or Position Servo)		
F1628D	Have, CNC display at the same time	24V DC Motor, 120W		
F1628S	Have, CNC display at the same time	Pulse + Direction (Step or Position Servo)		

F1629D	Have, CNC dis-play at the same time	24V DC Motor, 120W		

1.2 Equipment functions

1) Automatic initial positioning

Initial positioning is divided into proximity switch positioning detection mode and protective cap collision detection mode

- **Proximity switch positioning detection**

  NPN normally open proximity switch (or PNP normally open proximity switch) is used in this equipment, and normally the proximity switch is in contact state. In the positioning test process or the initial positioning process during arcing, when the cutting torch touches the work piece (or when the cutting torch tilts due to touching the work piece), the proximity switch will disengage, the detection circuit detects the signal, and the cutting torch will be up to the initial positioning height (the height value can be set by the "positioning height" knob of the panel). When the proximity switch is disengaged, the cutting torch will up until it touches the up limit of the motor.

- **Collision detection of protective cap**

  When the protective cap collision detection is adopted, the protective cap of the cutting torch contacts the work piece in any state, and the detection circuit will act to up the cutting torch to the initial positioning height (the height value can be set by the "positioning height" knob of the panel). Under normal circumstances, after the cutting torch ups, the protective cap leaves the work piece and the collision signal is reset immediately. If the collision signal of the protective cap is maintained, the cutting torch will up until it touches the up limit of the motor.

- **Two speed positioning**

  After the initial positioning process starts, the cutting torch will descend for 6 seconds at the fastest speed (the time can be changed by parameters), and then switch to low speed (low speed is 1/4 speed of high speed) until the cutting torch collides with the workpiece. Through two-speed positioning, the working efficiency can be improved, the speed can be reduced at a proper height, the collision impact force can be reduced, and the service life of the protective cap can be prolonged.

2) Automatic arc voltage height control

If the actual arc voltage does not exceed the set value of 30V (this parameter can be modified through the menu), the height controller will be in the Automatic height adjustment state.

3) Automatically up cutting torch after collision

In case of collision under non-cutting and non-positioning conditions, the cutting torch will be automatically up, and the time is the time for emergency collision and gun up. In the process of initial positioning test or collision during cutting, the cutting torch will be automatically up for the initial positioning height time.

4) Automatically up the cutting torch after cutting is completed

After the cutting is completed, the cutting torch is automatically up, and the up height can be set through parameters.

5) Manual operation

Automatic/manual height adjustment selection, manual up, manual downing, arcing test, initial positioning test, menu operation and other functions can be realized through the operation panel.

6) Automatic operation

After the numerical control system sends out the arcing signal, the height controller automatically completes the actions of initial positioning, arcing and arcing success feedback. After the numerical control system receives the arcing success feedback signal, the numerical control system controls the machine tool to start moving and cutting.

7) Arc voltage set point and actual value display monitoring function

The height controller uses two rows of high-brightness digital tubes to display the arc voltage value, the up row of green digital tubes to display the arc voltage set value, and the down row of red digital tubes to display the actual arc voltage value. It is convenient for users to monitor the arc voltage value in the cutting process in real time.

8) Menu operation

In the non-cutting state, you can enter the menu mode to change the parameters by pressing the panel key. Parameters such as speed and operation mode can be flexibly set.

9) Knob operation

The panel has three operation knobs, which can set parameters such as arc voltage, initial positioning height and perforation delay.

10) Effective level setting

The input switching value can be set to be low-level or high-level, which is flexible to adapt to the complex application environment on site. The default is active low. Changes can be made through the menu.

11) Anti-collision function

In the cutting process, if the cutting torch touches the workpiece due to too low arc voltage setting or nozzle loss, the height controller will immediately send a up signal to avoid damage caused by the cutting torch hitting the workpiece all the time. In case of collision in the cutting process, it is also possible to set the numerical control to stop cutting after several collisions. By default, once collision occurs, the numerical control system will be notified to stop cutting immediately. If the user does not connect the collision output signal to the numerical control system, the numerical control system will continue cutting when a collision occurs during cutting because the collision signal is not received. However, whether the numerical control system will stop cutting or not, in case of collision, the height controller will automatically up the cutting torch to the initial positioning height.

In the non-cutting process, as long as the cutting torch touches the steel plate, the cutting torch will automatically raise the height of a collision emergency up gun (normally, the height is higher than the positioning height, and this parameter can be modified).

12) Intelligent adjustment for arc voltage

When using the arc voltage intelligent adjustment function, in the cutting process, if the steel plate is touched twice in a row, the arc voltage setting value will Automatically increase by a preset value (the parameter can be modified and the default value is 5V). For example, the current arc voltage setting value is 110V. After the steel plate is touched twice in a row, the arc voltage setting value will automatically increase by 5V to 115V, thus increasing the torch height and preventing the workpiece from colliding again in the continuous cutting process.

13) Dynamic perforation

In the cutting process, under the condition of perforation delay, the cutting torch can be up to a height at the moment of Arcing, and the cutting torch can be downed to the original height before the perforation delay is finished. This function is an approximate dynamic perforation function. When piercing, the cutting torch is up a little, which can effectively prevent slag splashing onto the cutting gun during piercing. If the dynamic perforation up time is set to 0, the cutting torch will not be up during arcing.

The dynamic perforation height can be adjusted in real time through the shortcut keys of the operation **panel.**

14) Collision signal feedback

The height controller can immediately feed back the collision signal to the numerical control system so as to prevent the cutting machine from still moving after collision. It is also possible to set the height controller to feed back the collision signal to the numerical control system after several collisions, so as to maintain the continuity of cutting (used when cutting thin plates).

1.3 Technical parameters

Table 3 F162X Series Height Controller Technical Parameters

	F1620/F1621	F1627D	F1628D/F1629D	F1627S	F1628S
Working voltage	DC24V±10%, 200W				
Lifting motor	DC24 DC Motor, 45W	DC24 DC Motor, 120W		Steppingor position servo motor	
Type of drive	PWM stepless speed regulation, H-bridge MOS drive			Pulse + direction	
Working temperature	0-50℃				
Location mode	Protective cap positioning or proximity switch positioning				
Arc voltage	0V~600V, sampling accuracy 0.2V, control accuracy 0.5V.				
Partial voltage ratio	100：1, 50:1(F1621 only support 100:1)				
Vertical speed	Decided by motor and mechanical design				
Sensitivity	Through adjustable parameters				
Protection	Overload protection, over temperature protection, short circuit protection, under voltage protection, anti-reverse connection protection of power supply, etc.				

1.4 Chassis installation dimensions

1.4.1 F1620/F1621 model

Chassis size: 271mm wide, 190mm deep (excluding rear terminal), 70mm high.
Chassis mounting screw positioning

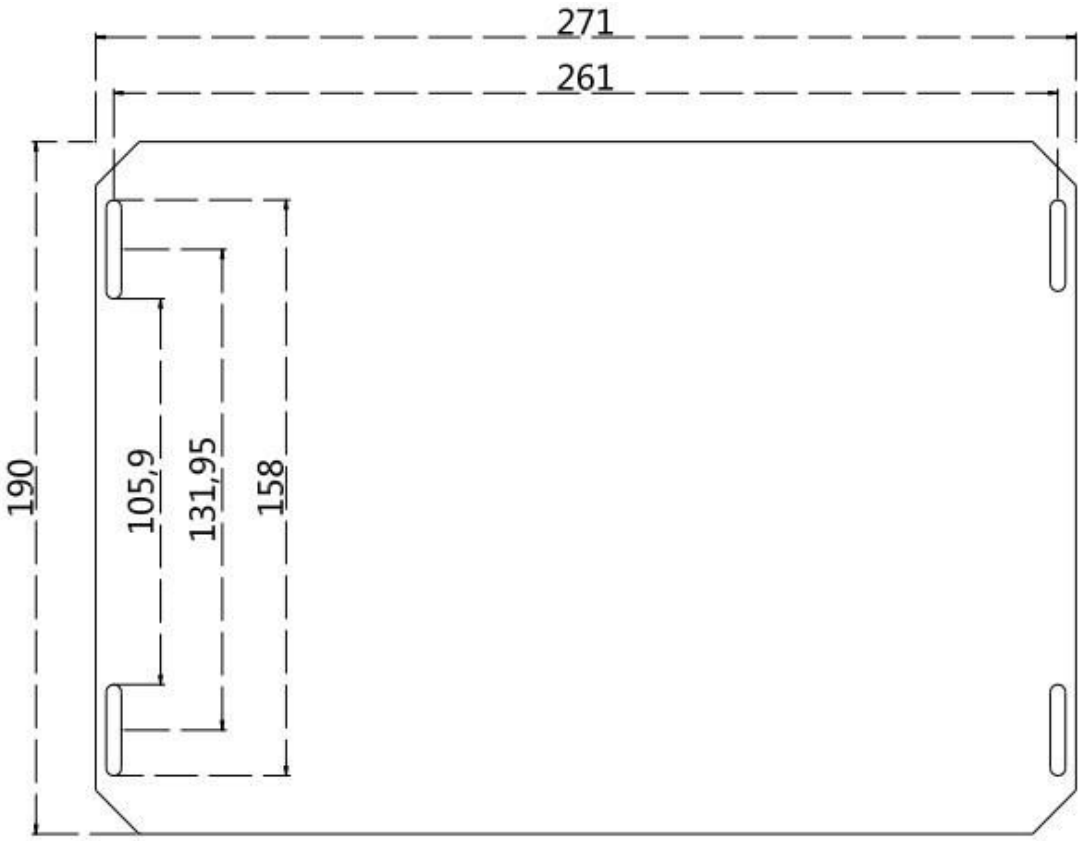

Figure 1.0.1 1F1620/F1621 installation dimensions of main engine.

1.4.2 F1627D and F1627S model

□Installation dimension drawing of main machine

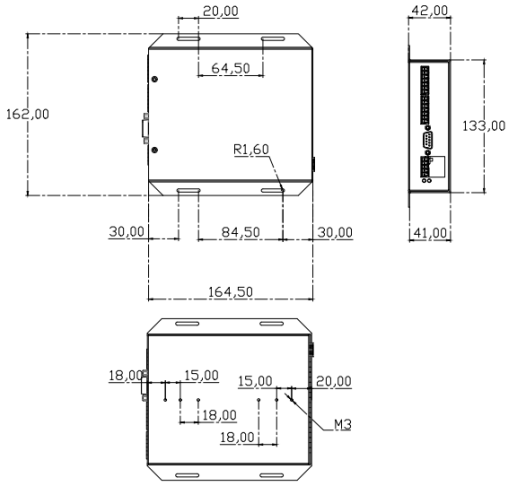

Figure 1.0.2 F1627 Series Host Installation Dimensions

□Installation dimension drawing of voltage divider

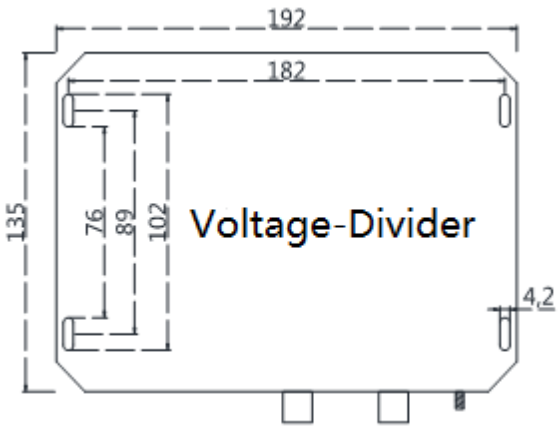

Figure 1.3 Installation dimension diagram of voltage divider

1.4.3 F1628D and F1628S model

Installation dimension drawing of operation panel and host

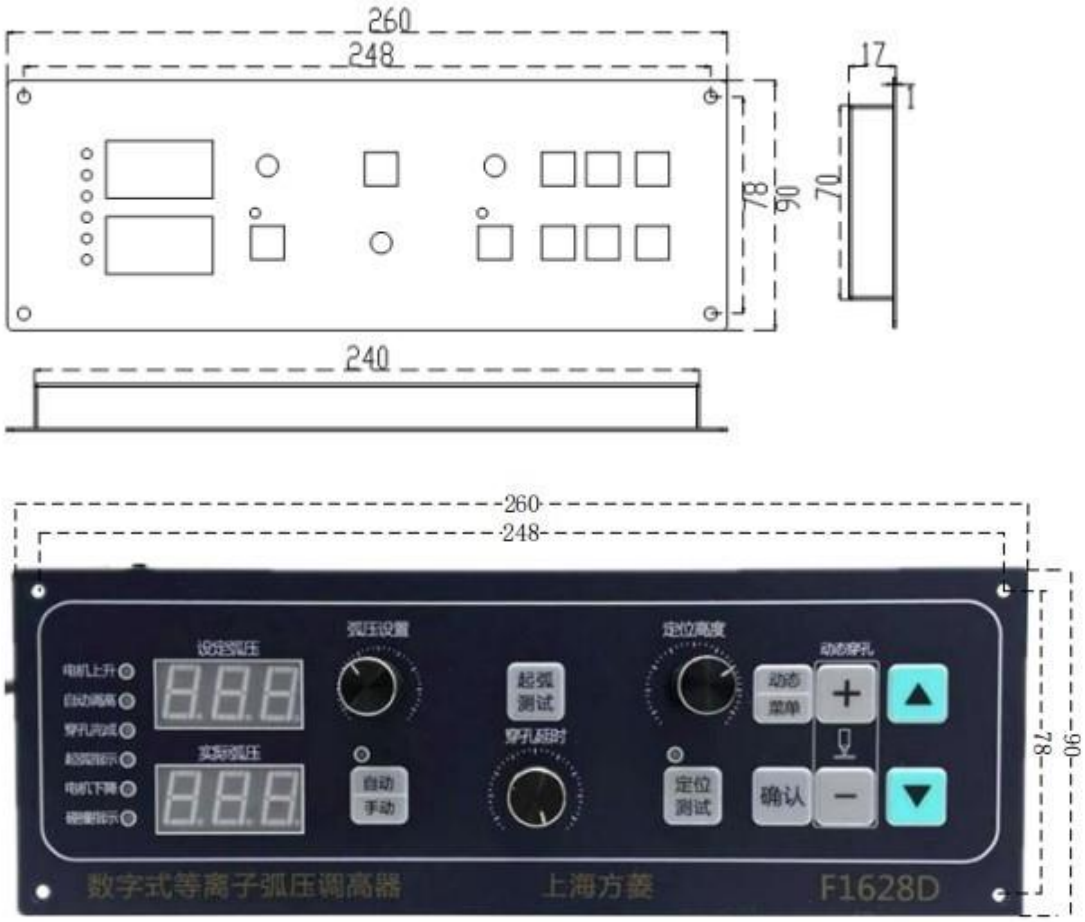

Figure 1. 4 F1628 Series Panel Installation Dimensions

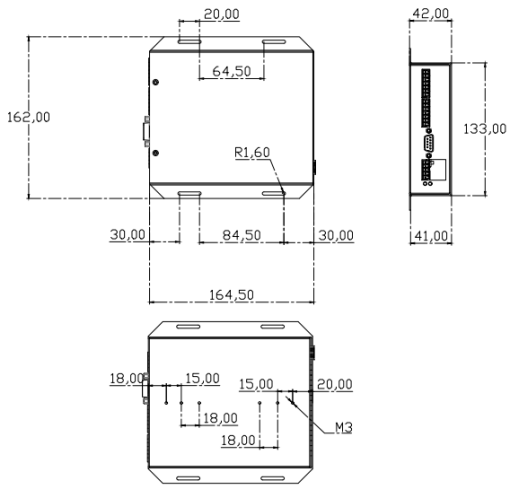

Figure 1. 5 F1628 Series Host Installation Dimensions

- **Installation dimension drawing of voltage divider**

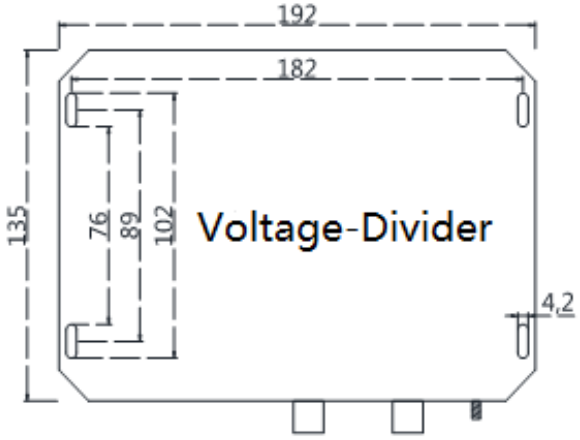

Figure 1.6 Installation dimension diagram of voltage divider

1.4.4 F1629D model

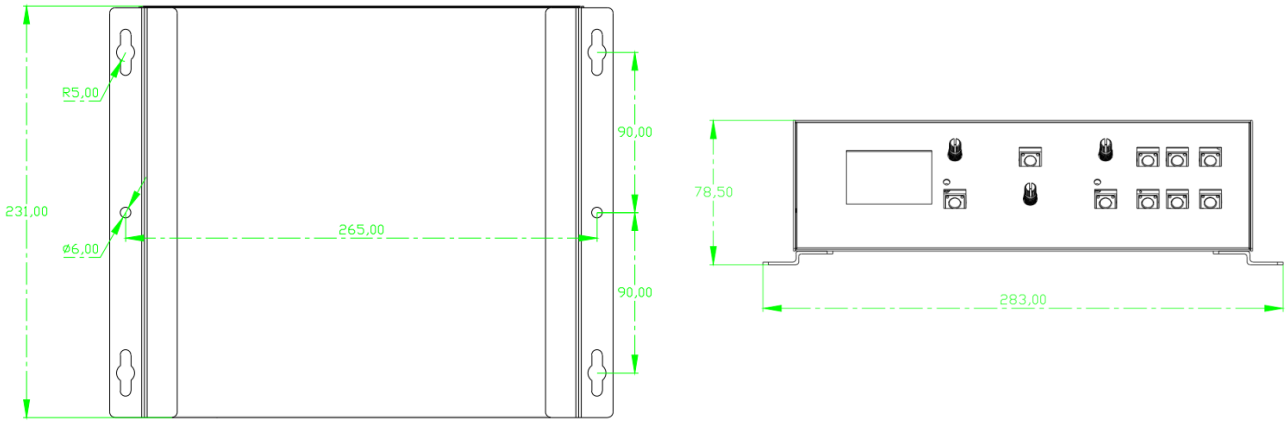

Figure 1.7 Installation dimension diagram of voltage divider

- **Installation dimension drawing of voltage divider**

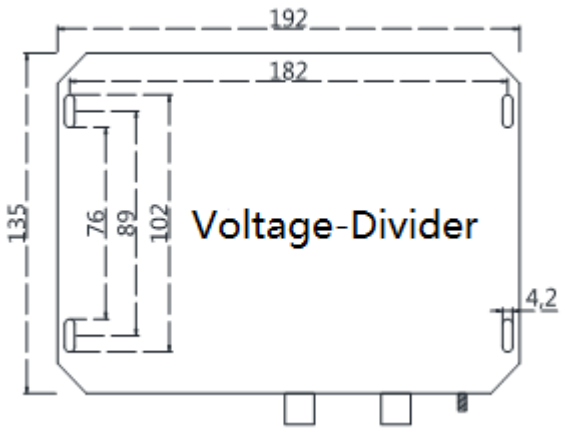

Figure 1.8 Installation dimension diagram of voltage divider

Chapter 2 System Operation

2.1 F162X Series Operation Panel Keys

2.1.1 F1620&F1628, F1629 series operation panel keys

(Note: the operation panel key instructions are only applicable to type F1620, F1628D and F1628S arc voltage height controllers, and the operation interfaces of F1627S and F1627D refer to the CNC numerical control system instructions)

Figure 2. 1 F1620 Panel and Key Description

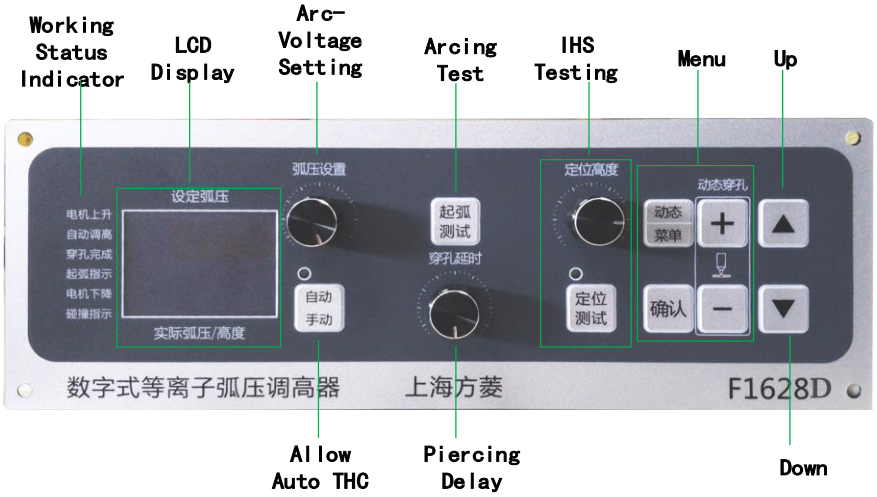

Figure 2. 2 F1628 Panel and Key Description

【▲】: Cutting torch up

【▼】: Cutting torch down

【Menu】: Enter the menu function key. In different states, it represents different functions.

【 Confirm 】: After entering the menu, press this key for the first time to enter the modification parameter. After the modification parameter is completed, press this key again to confirm the modification parameter.

【 + 】: F1620 When switching parameters, press this key to increment the Parameter No.; When modifying a parameter, press this key to increment the parameter value.
In the F1628 series, under the non-menu interface, pressing this key directly can increase the dynamic perforation value.

【 — 】: When modifying a parameter, press this key to decrement the parameter value.
In the F1628 series, under the non-menu interface, pressing this key directly can down the dynamic perforation value.

【Auto/Manual】:【Auto/Manual】is used to switch the allowed state of Automatic height adjustment. Each time the【Auto/Manual】is pressed, the "Auto/Manual" indicator above the key changes state. If the "Auto/Manual" indicator light is on, it indicates that Automatic height adjustment is allowed. At this time, automatic height adjustment can be performed during cutting. If the "Auto/Manual" indicator light is turned off by pressing the 【Auto/Manual】, the height adjustment device pauses automatic height adjustment. The "Auto/Manual" light is lit by default when starting up, and it is in the state of allowing automatic adjustment.

【Arcing Test】: In case of non-cutting and non-menu operation, press and hold this key, plasma will start arc (arcing relay is closed), and release this key to stop Arcing (arcing relay is open). When the arcing test key is released, the cutting torch will be up upward, and the up height is the height of the gun up after cutting.

【Positioning Test】: Under the condition of non-cutting and non-menu operation, press this key once to start the initial positioning operation until the positioning is completed. If this key is pressed again during positioning, or the torch up key [▲] is pressed, positioning will be stopped immediately. The indicator lamp above the【Positioning Test】is always lit during the positioning test. After the positioning test is completed, the lamp goes out.

2.1.2 F1621 series operation panel keys

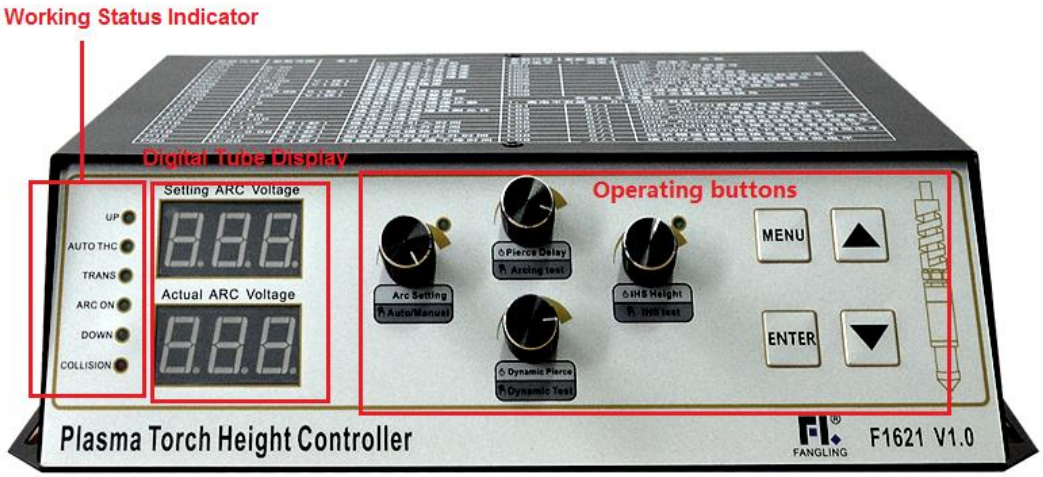

Figure 2. 3 F1621 Panel and Key Description

(Note: the operation panel key instructions are only applicable to type F1621, and the rotation function refer to 2.1.1)

	Key Function	Rotation Function	Other Rotation Function
①	Arc Voltage Setting	Auto/Manual	
②	Punch Delay	Arcing Test	
③	Dynamic Punching Time	Dynamic Test	
④	Positioning Height	Positioning Test	Under the menu interface, Rotate the positioning height key to select parameters. Then press the key of "OK", adjust it to change the parameters.

【▲】: Cutting torch up, Under the SYS interface, the gun is lowered to the '+' button.

【▼】: Cutting torch down, Under the SYS interface, the gun is lowered into a '-' button.

【Menu】: Enter the menu function key. In different states, it represents different functions.

【Confirm】: The confirm button. After entering the menu, press this key for the first time to enter the modification parameter. After the modification parameter is completed, press this key again to confirm the modification parameter.

2.2 F162X series operation panel interface

(Note: the operation panel interface description is only applicable to type F1620,F1621, F1628D and F1628S arc voltage height controllers, and the operation interfaces of F1627S and F1627D refer to the CNC numerical control system description)

Figure 2. 4 F1628 Series Panel and Key Description

2.2.1 Panel operation

Table 4 Digital Tube Display and Rotation Operation

	Default display	When rotating for 3 hours	When rotating for 4 hours	When rotating for 5 hours	Press Zone ± 6 hours
Display area 1	Setting arc voltage	Set arc voltage value	Show Dly	Show IHS	Show PIR

Display area 2	Real-time arc voltage	Real-time arc voltage	Punching time	Positioning height (arc striking height) Unit s (f1620, f1628d) Unit mm(F1628S)	Dynamic perforation height Unit s (F1620, f1682d); Unit mm(F1628S).

2.2.2 Work status indicator

The panel has 8 operating status indicators:

Motor up: This light will be on when the cutting torch ups.

Automatic height adjustment: this light is on, indicating that the height adjustment device is in an Automatic height adjustment state. Four conditions shall be met for the Automatic turn-up indicator to illuminate:

1) The panel Auto/Manual indicator light is on.

2) Enable the Automatic signal (CNC_AUTOMATIC) connected with the numerical control system.

3) The height controller detects arc voltage.

4) The actual arc voltage does not exceed the set arc voltage value + over-arc voltage protection value (generally 30V).

Perforation completion: this light is on, indicating that the system has detected the effective arc voltage value and the perforation is completed (referring to the time delay of perforation of the height controller, excluding the perforation delay of the numerical control system).

Arcing indicator: This indicator light illuminates to indicate that an Arcing command has been issued. When cutting with the "Arcing with initial positioning" signal, after the initial positioning is completed, the Arcing command is issued and the indicator light is lit.

During the arcing test, the indicator light is always on.

Motor down indicator: This indicator lights up when the cutting torch is down.

Collision indicator: this indicator will illuminate when the protective cap touches the work piece or the proximity switch disengages to trigger a collision signal.

Auto/Manual: The light above the [Auto/Manual] key indicates whether Automatic adjustment is allowed. This light is on, the height controller allows automatic height adjustment, this light is off, and the height controller prohibits Automatic height adjustment. This light will come on by default after starting the machine. Press the [Auto/Manual] once to change the state of the lamp once.

Positioning test: the light above the key [Positioning Test]. During the initial positioning test, the light is on, indicating that it is in the positioning test, while in other states, the indicator is off.

2.3 F162X series menu operation

(Note: F162X series menu operation is only applicable to F1620, F1628D and F1628S arc voltage height controllers, and the operation interfaces of F1627S and F1627D refer to CNC numerical control system description)

This series of height controllers are equipped with concise menus, which can set many parameters and flexibly adapt to various working conditions. The menu operation uses four keys, namely 【Menu】, 【Confirm】, 【+】 and 【-】. The parameters are displayed by double-row digital tubes, the Parameter No. is displayed by up-row digital tubes, and the parameter value is displayed by down-row digital tubes.

When used on site, the Parameter No. and its meaning can be referred to the concise parameter table printed on the top of the chassis.

Press the【+】【-】directly under the arc voltage setting interface, the up row of green digital tubes will display "PIR" and the down row of red digital tubes will display the perforation height value. The perforation height is set by delay in seconds. The perforation height is the height from the steel plate in millimeters (mm).

Press the 【Menu】 to enter the menu operation mode in the non-cutting state and without arcing test and initial positioning test. After entering the menu mode, the keys 【Positioning Test】【Arcing Test】etc. do not work, only the【▲】,【▼】and THC_UP and THC_DN signals from numerical control can work. In menu mode, test operation and cutting cannot be performed.

2.3.1 Menu mode conversion

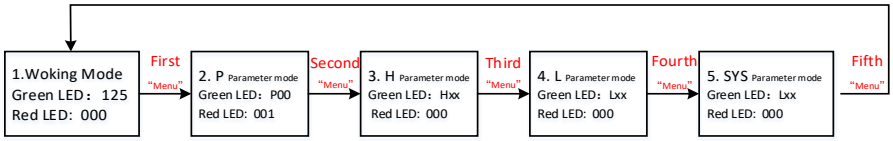

Figure 2.5 Menu Mode Conversion Process

The height controller has four submenus, namely “Pxx”“Hxx”“Lxx”“SYS”, plus a non-menu mode, with five states. In the non-cutting mode, press the 【Menu】 to cycle through the five states.

Note: In the non-menu mode, if the test operation is in progress or the automatic adjustment is in progress, you cannot enter the menu mode or modify the parameters. Similarly, if you have entered the menu mode, you cannot perform the test operation or the Automatic adjustment. The two are interlocked. Please note that users must remember to exit the menu mode in time after modifying the parameters.

2.3.2 Submenu browsing and modification

When switching to the corresponding menu interface according to the menu mode shown in Figure 2.4, it will be in the viewing mode by default, displaying the first parameter of the submenu. for example, the first parameter of the first submenu in the p parameter mode is "restore factory parameters", the top green LED will display "P00", and the bottom red LED will display "1" (i.e., the value of P00).

In the view mode of the submenu, press the 【+】 to switch to the next parameter of the submenu at the same level. For example, it is currently "P00". Press the 【+】 to switch to “P01”. The top green LED displays “P01”, the bottom red LED displays the value of P01. Press the 【+】 again to switch to "P02", and so on. Similarly, you can press the 【-】 to return to the previous parameter in turn.

In the view mode of the submenu, press the 【Confirm】 to enter the modification mode of the current parameter. At this time, the red LED starts flashing, indicating that the parameter is waiting for modification. At this time, press the 【+】【-】 to increase or down the value. The red LED is displayed as the modified value. After the parameter is changed, press the【Confirm】 to confirm the save and press the【Menu】to cancel the save.

Press the【Confirm】to confirm the save, and the red LED will stop blinking and display the modified value. If the parameter is changed, but the save is cancelled by pressing the 【Menu】 key, the red LED stops flashing and the parameter value before modification is displayed.

The submenu “Pxx” has two tables. Table 5 is applicable to F1620, F1621, F1627D and F1628D "P00" to "P21" with a total of 22 parameter values. Table 6 is only applicable to F1627S, F1628S "P00" to "P27" with a total of 26 parameter values, all of which contain various quantitative parameters. All parameters under this submenu can be modified.

The submenu "Hxx" contains a total of 9 parameter values "H01" to "H09" to check whether the input port signal is high or low. The parameters under this submenu can only be viewed and cannot be modified. Note: During cutting, press the【Menu】 k to view the level status of the input port.

The submenu "Lxx" contains a total of 9 parameter values “L01”~“L09”, which are used to set whether the input port signal is active at low level or high level. All parameters under this submenu can be modified.

The submenu "SYS" is used to display the current program Version No.

2.3.3 P Parameter list

Table 5P Parameter List (for F1620, F1621, F1627D, F1628D and F1629D)

Parameter No.	Setting range	Adjust step size	Initial parameter	Green LED	Red LED	Note	Detailed description
P00	0-1	1	1	P00	1	Restore Factory Parameters/Modify Parameter Interval	If P00 is changed to 0 and saved, various parameters of the equipment will be restored to factory parameters. When P00 is viewed after exiting, P00 will still be displayed as 1.
P01	0-50	1	50	P01	50	Manual up speed. 0 is the smallest and 50 is the largest. CNC_THC_UP also uses this speed.	
P02	0-50	1	50	P02	50 50	Manual descent speed. 0 is the smallest and 50 is the largest. CNC_THC_DN also uses this speed.	

P03	0-50	1	50	P03	50	Automatic up speed. 0 is the smallest and 50 is the largest.	
P04	0-50	1	50	P04	50	Automatic descent speed. 0 is the smallest and 50 is the largest.	
P05	10-100	1	30	P05	30	Over-arc voltage protection value. Unit: volts (v). Prevent the arc voltage from suddenly increasing too much to cause the cutting torch to drop rapidly.	In the plasma cutting process, if the cutting gun passes through the cutting seam (e.g. lead-in wire) or cuts out the steel plate, the arc voltage will up instantaneously. If there is no arc voltage protection, the cutting gun will drop rapidly. In the most serious case, the cutting gun will quickly hit the workpiece and damage the cutting torch. After setting this parameter, the cutting torch can be effectively protected.

P06	1-10	1	1	P06	1	Accuracy of arc voltage adjustment. Unit: volts (v).	When the difference between arc voltage and actual arc voltage is set within this value range, the torch height will not be adjusted. For example P06=3, if the arc voltage and actual arc voltage down value are less than 3V, the torch height will not be adjusted.
P07	1-50	1	6	P07	6	Sensitivity coefficient. The greater the coefficient, the higher the sensitivity. Too high sensitivity will easily cause the cutting torch to vibrate at the equilibrium position.	The larger the value is, the faster the cutting torch is adjusted. However, if the parameter is too large, the cutting torch will easily vibrate at the equilibrium position. If the parameter is too small, the cutting torch may not be able to track the change of the plate.

P08	0.1-9.9	0.01	2	P08	2.0	Time of emergency gun up in collision. Unit: seconds (s). Emergency gun up time when cutting torch encounters steel plate during non-cutting process.	In the non-cutting process, when the cutting torch touches the steel plate, the gun shall be up up at the fastest speed for emergency time.
P09	3-20	1	5	P09	5	Intelligent adjustment value of arc voltage. Unit: volts (v). If the steel plate is continuously touched in the cutting process, the arc voltage setting value will Automatically increase the parameter value. This function is only enabled when P10=1 and P11>=2.	When there are two consecutive collisions in the cutting process, the height controller automatically increases the set arc voltage by P09. This function can make up for the inaccurate arc voltage caused by the aging of cutting nozzle or motor, and can ensure the continuous operation of cutting.
P10	0 or1		0	P10	0	Enable intelligent adjustment of arc voltage. Set to 1 to allow intelligent adjustment of arc voltage.	
P11	0-5	1	0	P11	0	Number of collisions allowed during cutting. Set to 0 to indicate that once collision is detected during cutting, a collision stop signal will be sent	For example, if this parameter is set to 1, the height controller will not send a collision signal to CNC during the first collision in the cutting process,
						to CNC immediately.	and CNC will continue cutting, but the height controller will Automatically raise the cutting torch to an initial positioning height. If the collision occurs for the second time, the height controller will send a collision signal to the CNC, and CNC will immediately stop cutting after receiving this signal. The output port of the height controller for sending collision signals to CNC is TO CNC COLLISION.

P12	0or1	-	1	P12	1	The motor is switched between forward and reverse rotation. Changing this parameter can change the rotation direction of the motor.	For example, P12 is currently set to 1, if the motor is downed by pressing the up key, P12 is changed to 0, and the motor is raised by pressing the up key; or vice versa, Dallas to the auditorium
P13	0or1	-	1	P13	1	Proximity switch collision detection enabled. Set to 1 to allow proximity switch collision detection. Set to 0 is not allowed.	Set to 1, proximity switch collision detection is used; set to 0, proximity switch collision detection is not used. When it is set to 1, it is necessary to connect the proximity switch and ensure that the proximity switch is not disengaged, otherwise the lifting motor will always up due to continuous receiving of collision signals.
P14	1-50	1	50	P14	50	Brake acceleration. Set to 50, the braking speed is the fastest.	This parameter sets the speed of deceleration when parking. The larger the set value, the faster the deceleration and the shorter the parking time. The default maximum value is 50.
P15	1-100	1	100	P15	100	Reverse acceleration. The larger the value, the smaller the inversion transition time.	Speed adjustment step size when the motor reverses. When the motor speed changes or changes from positive to negative, the larger the parameter, the shorter the

							transition time during speed adjustment. The user can adjust it according to the specific situation when using it, and the default is the maximum value of 100.

P16	0.1-2	0.01	0.2	P16	0.2	Introduction time during arc calendaring. Unit: seconds (s).	After the Arcing command is issued, the arc voltage value is sampled after the delay of the time. This time is used to avoid the interference of high-frequency arc voltage at the moment of arcing.
P17	0-10	0.1	1	P17	1.0	Startup up time. Unit: seconds (s).	The time when the cutting torch will automatically up after the height controller is powered on. This parameter can ensure that the cutting torch is far away from the steel plate after power-on, thus avoiding collision caused by moving the cutting torch upon power-on.
P18	0.1-10	0.1	2	P18	2.0	Time for gun up after cutting is completed. Unit: seconds (s).	Used to up the cutting torch to a height after cutting is completed. During the arcing test, release the 【Arcing Test】 and the torch will also up for this time.
P19	0-9.9	0.01	0	P19	0	Dynamic perforation height. Unit: seconds (s).	When the perforation delay is not 0, this parameter can be used to issue an arcing command to raise the cutting torch while starting the arc. Before the perforation is completed, the cutting torch will be downed to its original height. When piercing, the cutting torch is up a little, which can effectively prevent slag splashing onto the cutting gun during piercing. If this parameter is set to 0, the cutting torch will not be up
							during arcing.

P20	0-20	0.1	6	P20	6.0	High speed drop time for dual speed positioning. Unit: seconds (s). In the process of double-speed positioning, the time of high-speed descent.	In two-speed positioning, the motor first descends at the highest speed for this time, then descends at the low speed until collision, with the low speed being 1/4 of the high speed. If set to 0, the motor will directly drop at 1/4 of the high speed.
P21	0-1	1	1	P21	1	Protective cap collision detection enabled. Set to 1 to allow the use of protective cap collision detection, set to 0 is not allowed.	If it is set to 1, the protective cap collision detection is used, and if it is set to 0, the protective cap is not used to detect collision. If you do not use a protective cap to detect collisions, set this parameter to 0.

Table 6 P Parameter List (for F1627S, F1628S)

Parameter No.	Setting range	Adjust step size	Initial parameter	Green LED	Red LED	Note	Detailed description
P00	0-1	1	1	P00	1	Restore Factory parameters/Modify Parameter Interval	If P00 is changed to 0 and saved, various parameters of the equipment will be restored to factory parameters. When P00 is viewed after exiting, P00 will still be displayed as 1.
P01	1-500	1	50	P01	50	Unit: mm/s. Manual up speed	
P02	1-500	1	50	P02	50	Unit: mm/s. Manual descent speed	
P03	1-500	1	50	P03	50	Unit: mm/s. Automatic up speed	
P04	1-500	1	50	P04	50	Unit: mm/s. Automatic descent speed	

P05	10-100	1	30	P05	30	Over-arc voltage protection value. Unit: volts (v). Prevent the arc voltage from suddenly increasing too much to cause the cutting torch to drop rapidly.	In the plasma cutting process, if the cutting gun passes through the cutting seam (e.g. lead-in wire) or cuts out the steel plate, the arc voltage will up instantaneously. If there is no arc voltage protection, the cutting gun will drop rapidly. In the most serious case, the cutting gun will quickly hit the workpiece and damage the cutting torch. After setting this parameter, the cutting torch can be effectively protected.

P06	1-10	1	1	P06	1	Accuracy of arc voltage adjustment. Unit: volts (v).	When the difference between arc voltage and actual arc voltage is set within this value range, the torch height will not be adjusted. For example P06=3, if the arc voltage and actual arc voltage down value are less than 3V, the torch height will not be adjusted.
P07	1-50	1	10	P07	10	Sensitivity coefficient. The greater the coefficient, the higher the sensitivity. Too high sensitivity will easily cause the cutting torch to vibrate at the equilibrium position.	The larger the value is, the faster the cutting torch is adjusted. However, if the parameter is too large, the cutting torch will easily vibrate at the equilibrium position. If the parameter is too small, the cutting torch may not be able to track the change of the plate.
P08	1-999	1	200	P08	200	Time of emergency gun up in collision. Unit: seconds (s). Emergency gun up time when cutting torch encounters steel plate during non-cutting process.	In the non-cutting process, when the cutting torch touches the steel plate, the gun shall be up up at the fastest speed for emergency time.
P09	3-20	1	5	P09	5	Intelligent adjustment value of arc voltage. Unit: volts (v). If the steel plate is continuously touched in the cutting process, the arc voltage setting value will Automatically increase the parameter value. This function is only enabled when P10=1 and P11>=2.	When there are two consecutive collisions in the cutting process, the height controller automatically increases the set arc voltage by P09. This function can make up for the inaccurate arc voltage caused by the aging of cutting nozzle or motor, and can ensure the continuous operation of cutting.

P10	0or1		0	P10	0	Enable intelligent adjustment of arc voltage. Set to 1 to allow intelligent adjustment of arc voltage.	
P11	0-5	1	0	P11	0	Number of collisions allowed during cutting. Set to 0 to indicate that once collision is detected during cutting, a collision stop signal will be sent to CNC immediately.	For example, if this parameter is set to 1, the height controller will not send a collision signal to CNC during the first collision in the cutting process, and CNC will continue cutting, but the height controller will
							Automatically raise the cutting torch to an initial positioning height. If the collision occurs for the second time, the height controller will send a collision signal to the CNC, and CNC will immediately stop cutting after receiving this signal. The output port of the height controller for sending collision signals to CNC is TO CNC COLLISION.
P12	0or1		1	P12	1	The motor is switched between forward and reverse rotation. Changing this parameter can change the rotation direction of the motor.	For example, P12 is currently set to 1, if the motor is downed by pressing the up key, P12 is changed to 0, and the motor is raised by pressing the up key; or vice versa, Dallas to the auditorium
P13	0or1		1	P13	1	Proximity switch collision detection enabled. Set to 1 to allow proximity switch collision detection. Set to 0 is not allowed.	Set to 1, proximity switch collision detection is used; set to 0, proximity switch collision detection is not used. When it is set to 1, it is necessary to connect the proximity switch and ensure that the proximity switch is not disengaged, otherwise the lifting motor will always up due to continuous receiving of collision signals.
P14	1-999	1	500	P14	500	Acceleration.	Unit: mm/s^2. Acceleration

P16	0.1-2	0.01	0.2	P16	0.2	Introduction time during arc calendering. Unit: seconds (s).	After the arcing command is issued, the arc voltage value is sampled after the delay of the time. This time is used to avoid the interference of high-frequency arc voltage at the moment of arcing.
P17	0or1		0	P17	0	Boot up enable. Unit: seconds (s).	After the height controller is powered on for the first time, the cutting torch will Automatically up until it meets the up limit. Note: This parameter is set to 0 during the first installation and debugging, and will not be activated until the up and down limits and motor direction are correct.
P18	0-999	1	100	P18	100	Up the gun height after cutting is completed. Unit: mm.	Used to up the cutting torch to a height after cutting is completed. During the arcing test, release the
							【Arcing Test】 and the torch will also up for this time.
P19	1-20	0.1	3	P19	3.0	Dynamic perforation height. Unit: seconds (s).	After successful arc ignition, the height of the cutting gun from the steel plate during perforation.
P20	10-200	1	20	P20	20	High speed drop time for dual speed positioning. Unit: mm. In two-speed positioning, the motor first descends the height at the highest speed, then descends at the low speed until collision, and the low speed is 1/4 of the high speed.	If set to 0, the motor will directly drop at 1/4 of the high speed. In case of startup and power-on, collision alarm, manual up and fall, idle time exceeding 30s, and abnormality of the height controller, a slow positioning will be Automatically performed to reposition the height of the workpiece.
P21	0-1	1	1	P21	1	Collision detection of protective cap is allowed.	Set to 1 to use protective cap collision detection, set to 0 not to use protective cap collision detection.
P26	0-20	1	2	P26	2	Cutting height. Unit: mm.	After the perforation time is over, the cutting gun needs to be downed to a certain cutting height.

P27	1-999	1	200	P27	200	The integer part of the pulse equivalent. Unit: p/mm.	When the cutting gun moves 1mm, the number of pulses that the system needs to emit. When the height controller is used for the first time, the parameter shall be adjusted first.
P28	0-0.99	0.01	0	P28	0	The fractional part of the pulse equivalent. Unit: p/mm.	When the cutting gun moves 1mm, the number of pulses that the system needs to emit. When the height controller is used for the first time, the parameter shall be adjusted first.
P29	1-500	1	50	P29	50	Automatic speed adjustment. Unit: mm/s.	The maximum speed that the height controller can reach when working in the Automatic height adjustment state. If the speed is too small, it will lead to insensitive tracking of the height controller.
P30	0-3	1	0	P30	0	Delay in completing gun up. Unit: s.	After the cutting is finished, the height controller will delay the time, and then up the gun. The height of the up is the height of the gun.

2.3.4 H status list

The red LED shows the high and low level state of the input port, with 0 representing the input low level and 1 representing the input high level.

Table 7 H Status List

Parameter No.	Parameter range	Green LED	Red LED	Remarks
H01	0or1	H01	0	CNC _ Auto/Manual signal level status.
H02	0or1	H02	0	CNC up (CNC_THC_UP) signal level state.
H03	0or1	H03	0	CNC down (CNC_THC_DN) signal level state.
H04	0or1	H04	0	The state of the signal level of the starting arc (CNC_IHSAON) of the CNC belt with initial IHS
H05	0or1	H05	0	CNC arcing without initial IHS (CNC_EXAON) signal level state.

H06	0or1	H06	0	Motor up limit (UP_LIMIT) signal level state.
H07	0or1	H07	0	Motor down limit (DN_LIMIT) signal level status.
H08	0or1	H08	0	Protective cap collision detection signal level status.
H09	0or1	H09	0	Proximity switch collision detection signal level state.

2.3.5 L Parameter list

The red LED shows whether the input port signal is active low or active high. 0 means the input port is active at low level and 1 means the input port is active at high level. When the low level is active, if the current actual level of the input signal is 0, it indicates that the signal has occurred. For example, when "L05" is set to 0, it is found that "H04" is 0, which indicates that the signal is valid now, i.e. the arcing signal with initial positioning sent by the numerical control system is valid. If "H04" is 1, it indicates that the current numerical control system has not sent the arcing signal with initial positioning.

The system default input is active low.Users can adjust according to actual usage.

Table 8 L Parameter List

Parameter No.	Parameter range	Default parameter	Green LED	Red LED	Remarks
L01	0or1	0	L01	0	CNC Automatic (CNC_ Auto/Manual) active level.
L02	0or1	0	L02	0	CNC up (CNC_THC_UP) active level.
L03	0or1	0	L03	0	CNC down (CNC_THC_UP) active level.
L04	0or1	0	L04	0	Effective level of （CNC_IHSAON） signal with initial positioning.
L05	0or1	0	L05	0	CNC Arcing (CNC_EXAON) Signal Effective Level Without Initial Positioning.
L06	0or1	1	L06	1	Active level of motor up limit (UP_LIMIT) signal.
L07	0or1	1	L07	1	Effective level of motor down limit (DN_LIMIT) signal.
L08	0or1	0	L08	0	Effective level of protective cap collision detection signal.
L 09	0or1	0	L09	0	The proximity switch detects the effective level of the signal.

Note: The default motor limit L06 and L07 are set to 1, that is, the motor limit switch should be connected in the form of a normally closed contact. Users can adjust according to the actual situation. If the lifting motor does not have a limit switch, it can be disconnected, but L06 and L07 need to be set to 0.

2.4 Work process

2.4.1 Cutting process with initial positioning

When the IHS_ARCON signal with initial positioning is valid, the height controller first performs initial positioning operation: the cutting torch is downed until collision occurs, then the cutting torch is up to the initial positioning height, the height controller issues an arcing command to control the arcing relay to close, the plasma power source starts arcing, and after arcing is successful, the height controller sends an Arcing success signal to the numerical control system after the perforation delay time. The numerical control system starts cutting. If the height controller is in the automatic permission state and the numerical control system has sent an Automatic height adjustment signal, the height controller is in the Automatic height adjustment state. During cutting, if the 【Auto/Manual】of the height controller panel is pressed to make the height controller withdraw from the automatic permission state, the automatic height adjustment will be suspended, and the cutting torch will remain at the same height. If the 【Auto/Manual】 is pressed again to make the height controller return to the automatic permission state, the height controller will continue to automatically adjust the height. After cutting is completed, the numerical control system turns off the IHS_ARCON signal, and the height controller automatically controls the cutting torch to raise to the set height.

2.4.2 Cutting process of direct arcing without initial positioning

When the arcing signal connected to the numerical control system is a direct arcing operation (DIR_ARCON) signal without initial positioning, the height controller does not perform initial positioning operation, but directly issues an arcing command to control the arcing relay to close, the plasma power source starts arcing, and after arcing is successful, the height controller sends an arcing success signal to the numerical control system after a perforation delay time. The numerical control system starts cutting. If the height controller is in the automatic permission state and the numerical control system has sent an Automatic height adjustment signal, the height controller is in the automatic height adjustment state. During cutting, if the 【Auto/Manual】 of the height controller panel is pressed to make the height controller withdraw from the Automatic permission state, the automatic height adjustment will be suspended, and the cutting torch will remain at the same height. If the 【Auto/Manual】 is pressed again to make the height controller return to the Automatic permission state, the height controller will continue to automatically adjust the height. After the cutting is completed, the numerical control system turns off the DIR_ARCON signal, and the height controller automatically controls the cutting torch to raise to the set height.

2.4.3 Workflow

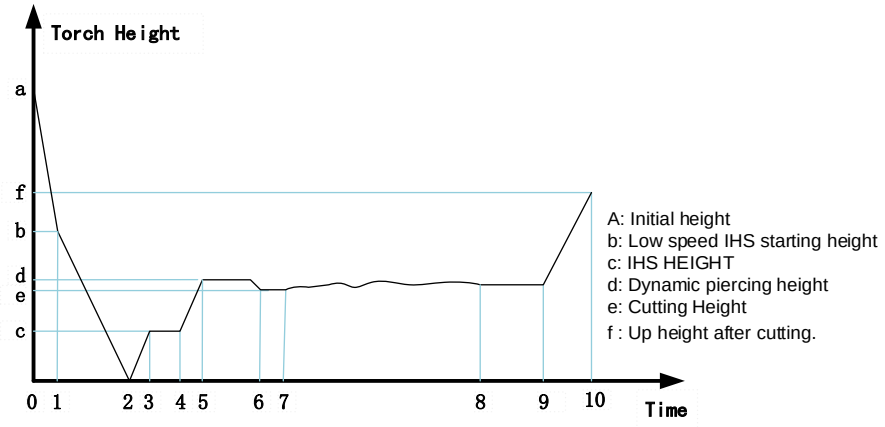

0-1: High-speed IHS and descending stage.
1-2: Low speed descending phase.
2: Torch touch the workpiece, IHS done
2-3: IHS torch up stage
3-4: Arcing stage
4-5：Arcing success, Dynamic piercing torch up.

5-6: Piercing delay
6-7: Tracking cutting height
7-8: Cutting stage
8: Cutting done
8-9: Torch up delay
9-10: Torch lifting up

Figure 2.6 Workflow

When the input IHS_ARCON signal is valid, the complete flow of 0 ~ 10 is executed.
When the input DIR_ARCON signal is valid, the flow of 3-10 is executed.

2.4.4 Dynamic Punching instructions

DC Motor

Note that T0 is the time set by the arc voltage delay introduction time (P16) parameter. T1 is the time set by the panel rotate punch delay，T2 is the time set for the dynamic punch height (P19) parameter.

1.if T2<=(T0+T1)/2，The rise time of the punch is T2，The punch time can hold is T = (T0+T1)-(T2*2)，The fall time of the punch is also T2，The total dynamic punching time is T0+T1.

2.if T2>(T0+T1)/2, The rise time of the punch is (T0+T1)/2，The time taken for the punch hold time is 0, The time for the punch to fall is equal to the rise .Under the condition of this parameter setting, it is found that the dynamic punching process is short or almost none, please increase the value of T0, T1.

The above applies to F1620、F1627D and F168D/F1629D.

Stepper Motor

Note that H0 is the height set by the panel rotate positioning height，H1 is the height set for the dynamic punch height (P19) parameter，T is the time set by the panel rotate punch delay，H2 is the height set for the cutting height (P26) parameter.

1.If H0 < H1, H2 < H1, the height at which the punch rises is H1, the punch time can hold is T, and the height at which the punch lowered is H2, the dynamic punching is normal.
2.If H0 < H1, H2 > = H1, the punching only up, and no down.
3.If H0>=H1, H2>=H1 and >=H0, the punching no up, and no down, there is no Dynamic perforation action.
4. If H0>=H1 and H2<H0, the punching no up and only down.
The above applies to F1627S, F168S.

2.4.5 Height mode instruction

When in the height mode, the height will be controlled that based on the height between the torch and the plate after piercing. It applies for the torch which its electrode consume fast (when having the same voltage, the torch getting closer to the plate). Choosing the height mode can avoid this situation. This function only applies to F1628D/F1629D,
F1627D (only with F2000 series).

2.4.6 Multiple THC I/O synchronize signal

Only the model F1629D has this function. When activate this function, two THC will synchronize the I/O signal, caused both of them work together.

Activate method is change parameter P22 from 0 to 1.

Wiring method is shown as figure 2.8

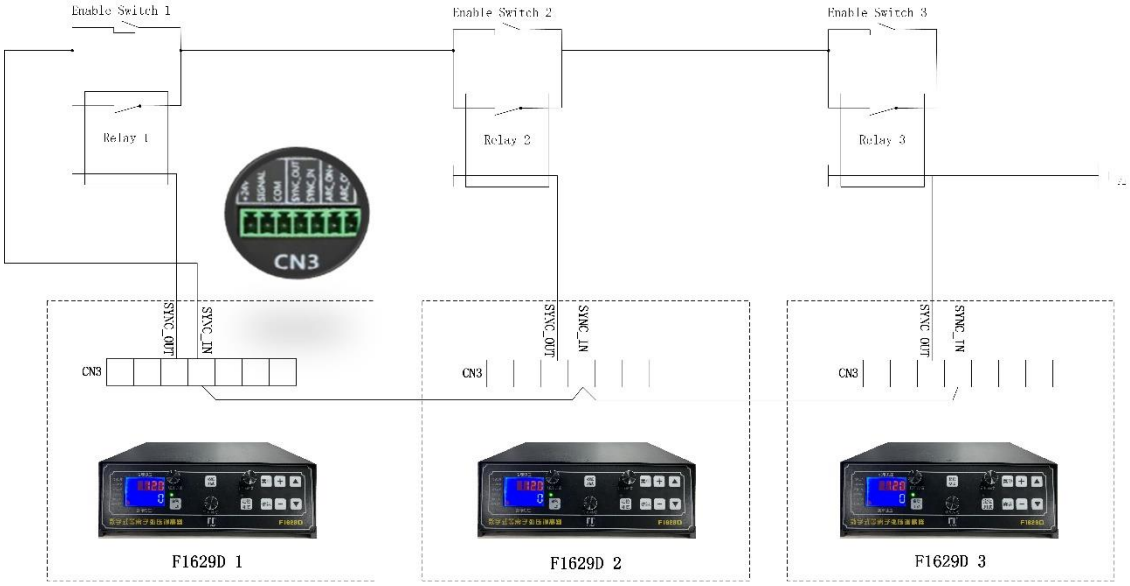

Figure 2.7 Wiring diagram for Multiple THC IO Signal Synchronization

Note:
1. This function cannot work with CAN. Please do not connect with CAN if the user enable the IO signal Synchronization.
2. When the switch is ON, the matching relay should be disconnected, and the THC will be enabled.
3. If the user need to disable the certain THC, please make sure the match relay is connected(the switch is off).
4. The switches are not necessary.
5. There is no limitation for the numbers of the THCs, please make sure your wiring is correct as the above diagram.

Chapter 3 Interface Connection

3.1 F162X Wiring Diagram

3.1.1 F1620 model controller view

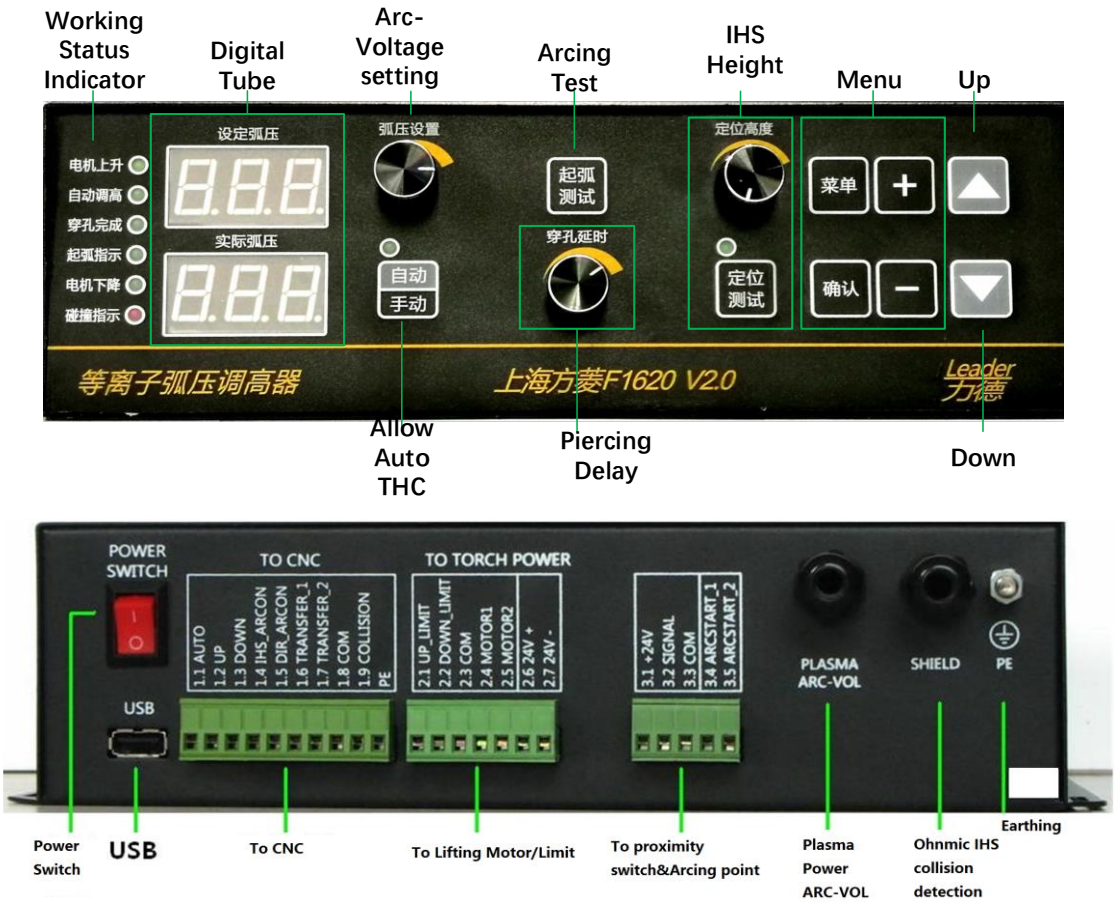

Figure 3. 1 F1620 Chassis View

3.1.2 F1621 model controller view

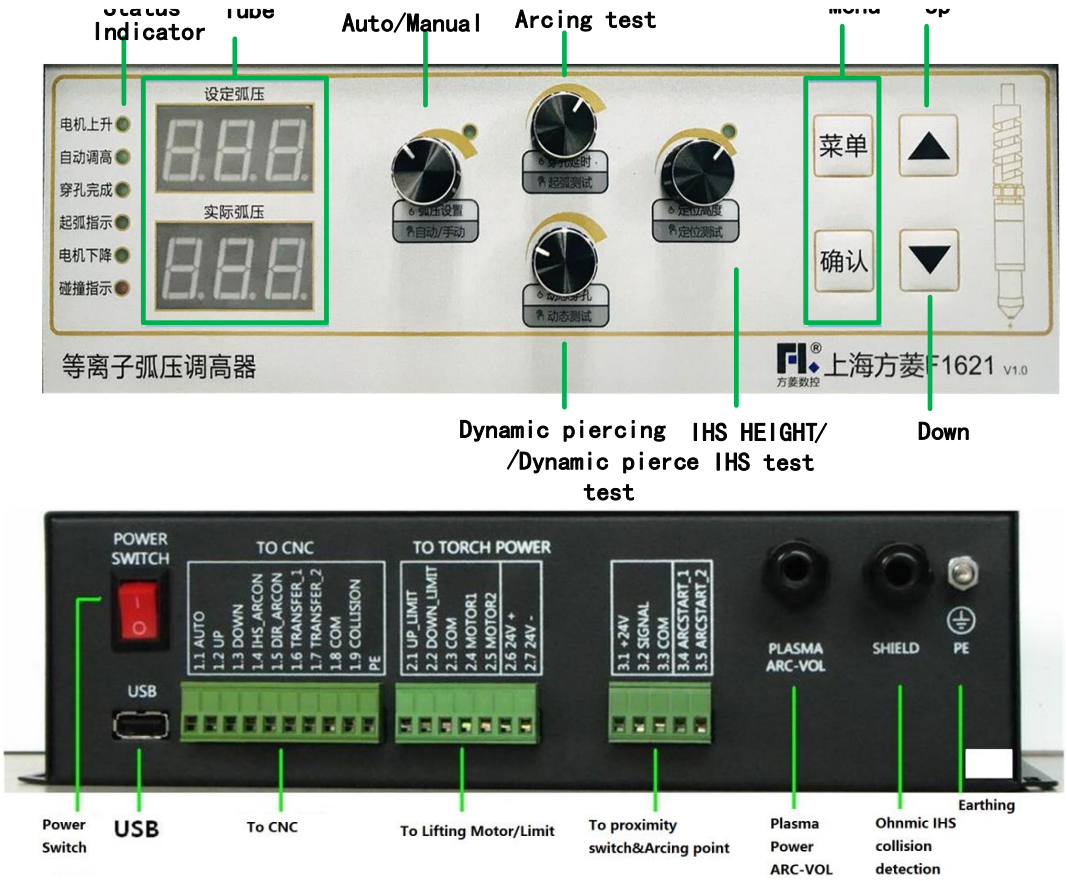

Figure 3. 2 F1621 Chassis View

3.1.3 F1620/F1621 Wiring Diagram

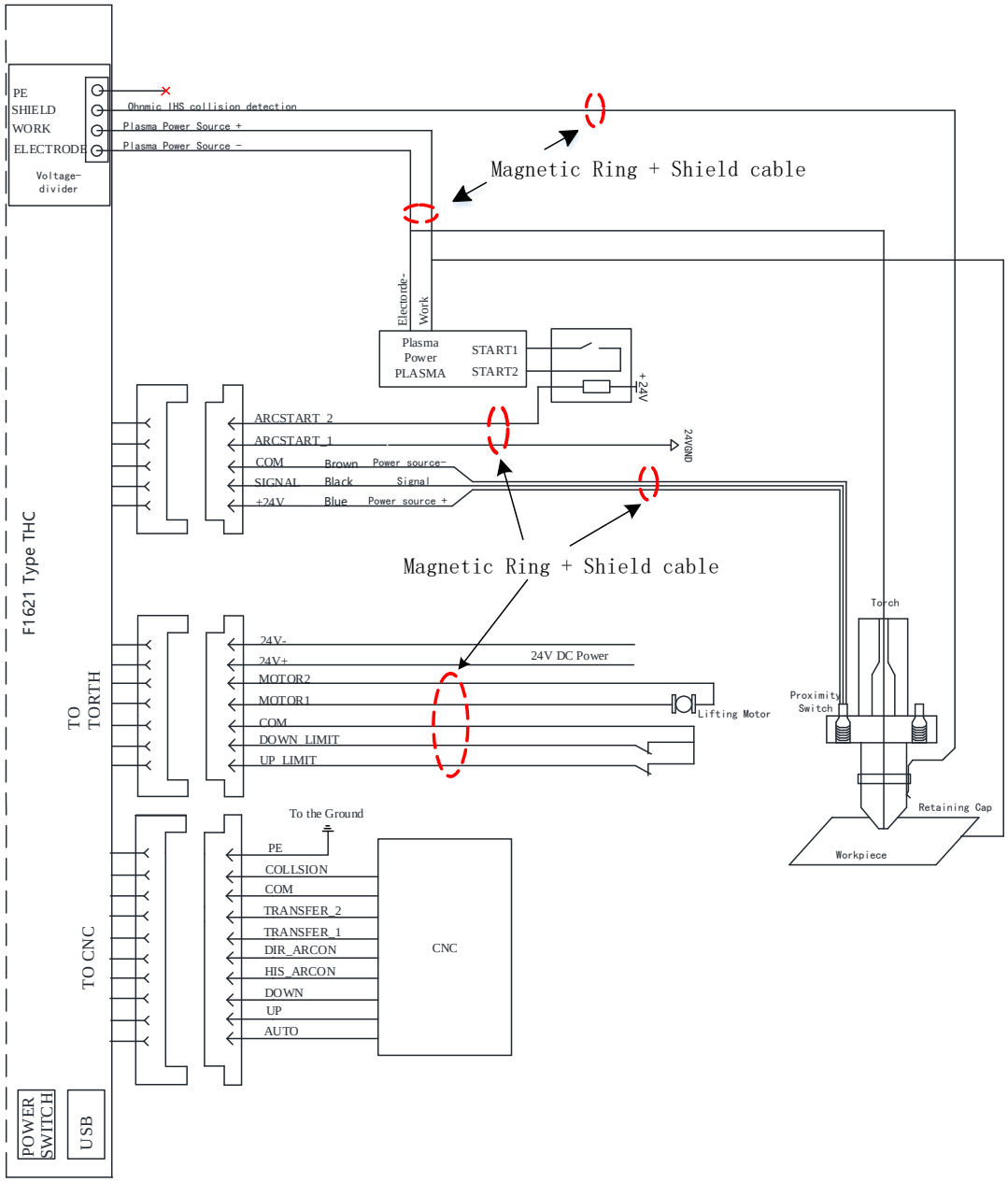

Figure 3. 3 F1621 General Wiring Diagram

3.1.4 F1620 CNC interface

This series of height controllers are connected to the numerical control system through a 10-core socket. The pin definition is as follows:

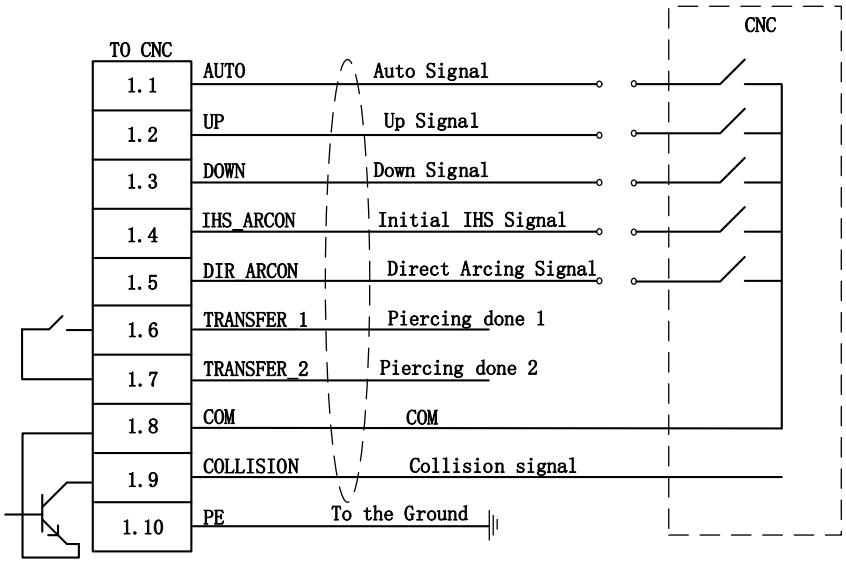

Figure 3. 4 F1620 wiring of numerical control system

Note:

1) The signals connected with the numerical control are isolated by optical coupler, and the default low level is valid (can be modified to high level is valid).

2) Perforation completion signals (TRANSFER_1, TRANSFER_2) are a pair of normally open contacts of the relay. When the effective arc voltage is detected after the perforation is completed, the contact is closed; When the arc does not start, the contacts remain open. Table 9 Definition of CNC Interface

Pin No.	Signal	Content
1.1	Automatic Signal (Auto/Manual) (Automatic)	Automatic up enable: default low is valid. Connect the closing and raising of the numerical control system, or corner signals, or corner signals of low speed, etc.
1.2	Up	Cutting torch up control signal: the default low level is valid. CNC controls the height controller through this interface, thus controlling the torch to up.
1.3	Down	Cutting torch downing control signal: the default low level is valid. CNC controls the height controller through this interface, thus controlling the cutting torch to descend.
1.4	Starting arc signal with initial positioning (IHSARCON)	Arcing signal with initial positioning: the default low level is valid. When CNC cutting, output low level to the interface, and the height controller starts positioning and arcing.
1.5	Direct arcing signal	Direct arcing signal (no initial positioning process required): the default low level is valid.
1.6	Perforation completion signal (TRANSFER1)	Output perforation completion signal: after Arcing, effective arc voltage is detected after

1.7	Perforation completion signal (TRANSFER2)	perforation delay time, closing the pair of contacts of TRANSFER1 and TRANSFER2. This point is the normally open contact of the relay. This port is the arcing success feedback signal.
1.8	Control signal COMmon terminal (com)	Pin 1.1, pin 1.2, pin 1.3, pin 1.4, pin 1.5, pin 1.9 all use this interface as a common terminal for control signals and are connected to the signal ground of the numerical control system.
1.9	COLLISION feedback signal	Output collision signal: open drain output, pull load shall be connected externally. When the height controller detects a collision, this pin will output a low signal. After receiving the collision signal, the numerical control system immediately stops cutting.

3.1.5 Lifting motor, limit switch and power supply

This series of height controllers use DC 24V power supply, with the maximum power supply range of 24V±10%. The power of DC 24V depends on the motor power, and the DC power supply power should be > motor power * 2.

The power interface uses the same set of plugs as the motor and the motor limit interface.

Socket wiring is defined as follows:

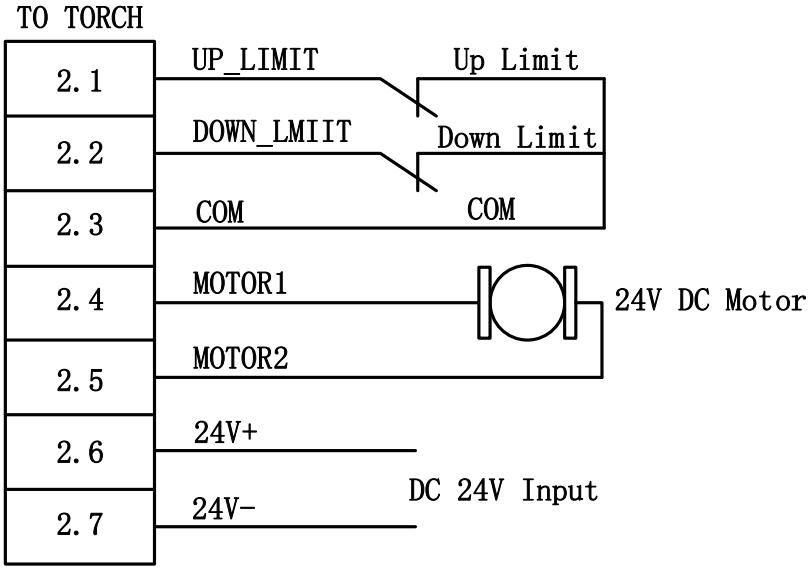

Figure 3.5 Power supply, motor and limit port

Normally, the motor limit switch adopts normally closed contact. The default limit switch of the height controller is normally closed, so parameters L06 and L07 should be set to 1. If normally open contacts are used, parameters L06 and L07 shall be set to 0.

Table 10 TO TORCH Interface 7-Core Socket Pin Description

Pin No.	Signal	Content
2.1	UP_LIMIT	Up limit input of DC motor. For normally closed contacts, pin 2.1 and pin 2.3 are shorted when the limit switch is not activated. When the motor encounters the limit switch, the limit switch is activated and pin 2.1 is disconnected from pin 2.3.
2.2	DOWN_LIMIT	Down limit input of DC motor. For normally closed contacts, pin 2.2 and pin 2.3 are shorted when the limit switch is not activated. When the motor encounters the limit switch, the limit switch is activated and pin 3 is disconnected from pin 5.
2.3	COM	Pin 2.3, Limit Common COM
2.4,2.5	MOTOR1，MOTOR2	The DC motor drive output is connected to the positive and negative poles of 24V DC motor, and
		the maximum power of the motor is 100W. If you want to change the rotation direction of the DC motor, you can do it by exchanging the wiring of MOTOR1 and MOTOR2, or by inverting the parameter P12.
2.6	Power supply interface (24V+)	DC 24V Positive Input
2.7	Power Interface (24V-)	DC 24V Negative Input

3.1.6 Proximity switch and plasma arcing interface

This series of height controllers are connected to the arcing switch and proximity switch through a 5-core socket. The pin is defined as follows:

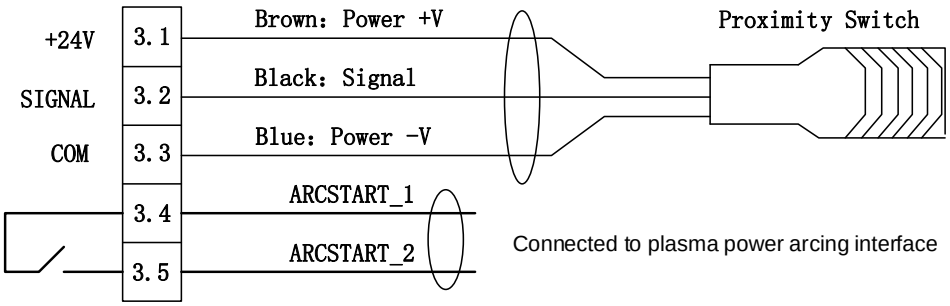

Figure 3.6 Arcing relay and proximity switch interface

Table 11 5 Pin Descriptions for Core Sockets

Pin No.	Signal	Content
3.1	+24V	Close to the positive pole of switching power supply (output, no external power supply)
3.2	SIGNAL	Proximity switch signal input
3.3	COM	Close to negative pole of switching power supply
3.4	Arcing inter-face (ARCSTART_1, ARCSTART_2)	Normally open contact of relay. When an arcing command is issued, the contact is closed to start the arc of the plasma power supply.
3.5		

The arcing interface adopts the normally open contact of the relay: during arcing and cutting, the relay contact is on; Other states are off. The contact capacity of the relay is 10A/250VAC. If the working voltage and current of the arcing control circuit of the plasma power source selected by the user exceed this rated value, please use the intermediate relay to expand the capacity, otherwise the system will not work stably and reliably. It is suggested to add arcing relay for protection function.

A 200mA self-recovery fuse is installed in the proximity switch detection circuit inside the height controller to prevent damage to the power supply when the proximity switch fails.

The height controller can be recognized regardless of whether it is connected with NPN type or PNP type normally open proximity switch. When leaving the factory, NPN proximity switches are used by default. The difference between NPN type and PNP type lies in the difference of L09 parameters. If the received collision signal is contrary to the actual situation, it is only necessary to reverse L09 parameter.

If more than two NPN proximity switches are used, connect them in series. The following figure shows the connection of two proximity switches in series. In this way, any proximity switch will trigger a collision signal when connected.

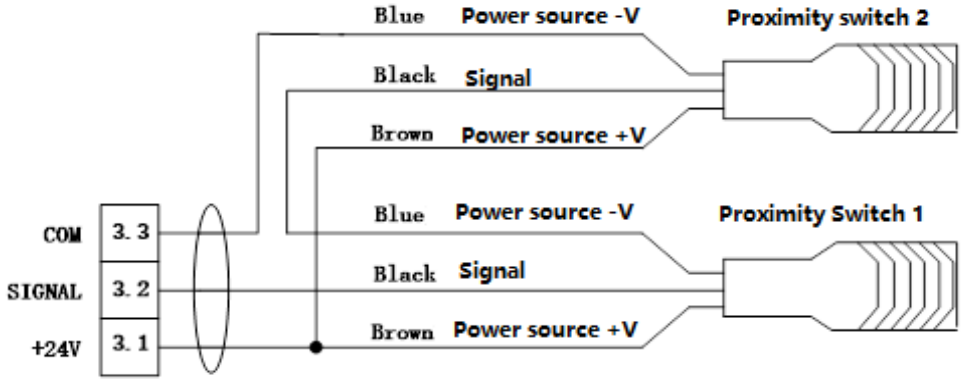

Figure 3.7 Series connection of two proximity switches

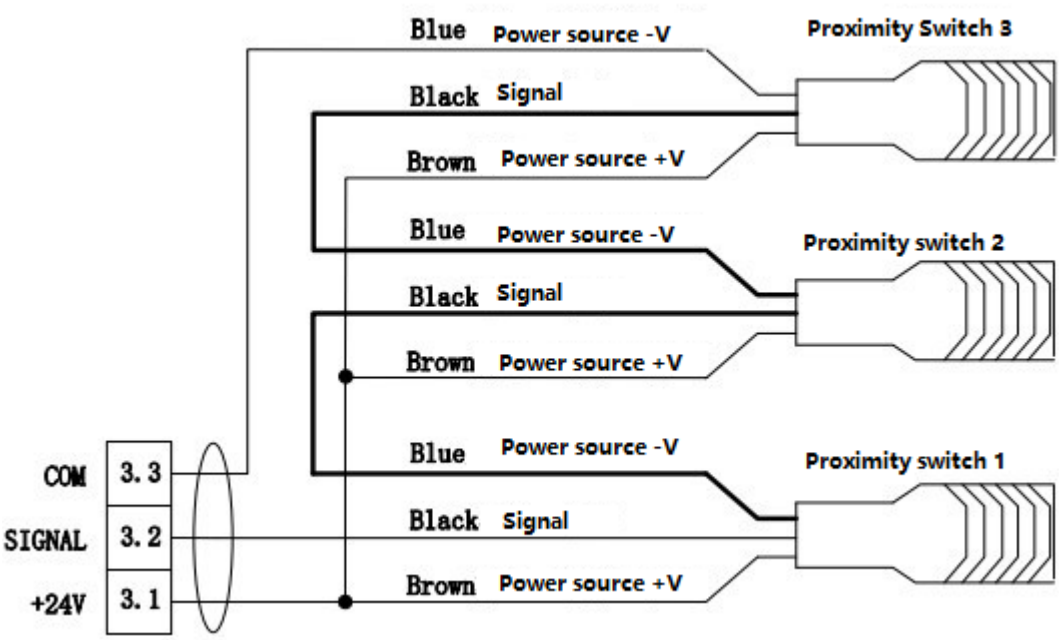

Figure 3.8 Series connection of three proximity switches

Note:

1) NPN normally open proximity switch series connection is recommended. In this way, when any proximity switch is disengaged, the height controller will receive a collision signal.

2) L09 should be set to 0 when using a single NPN normally open proximity switch or multiple NPN normally open proximity switches.

3) When the proximity switch is disengaged, the red indicator light of the proximity switch itself will go out, and at the same time the collision indicator light (red) of the height controller panel will come on.

4) Under normal circumstances, if the cutting torch does not collide or tilt, the red indicator light of the proximity switch itself will always be on.

3.1.7 Arc voltage and protective cap interface

F1620 digital arc voltage height controller uses built-in voltage divider to detect plasma arc voltage and collision signal of protective cap. The following diagram shows the overall wiring diagram:

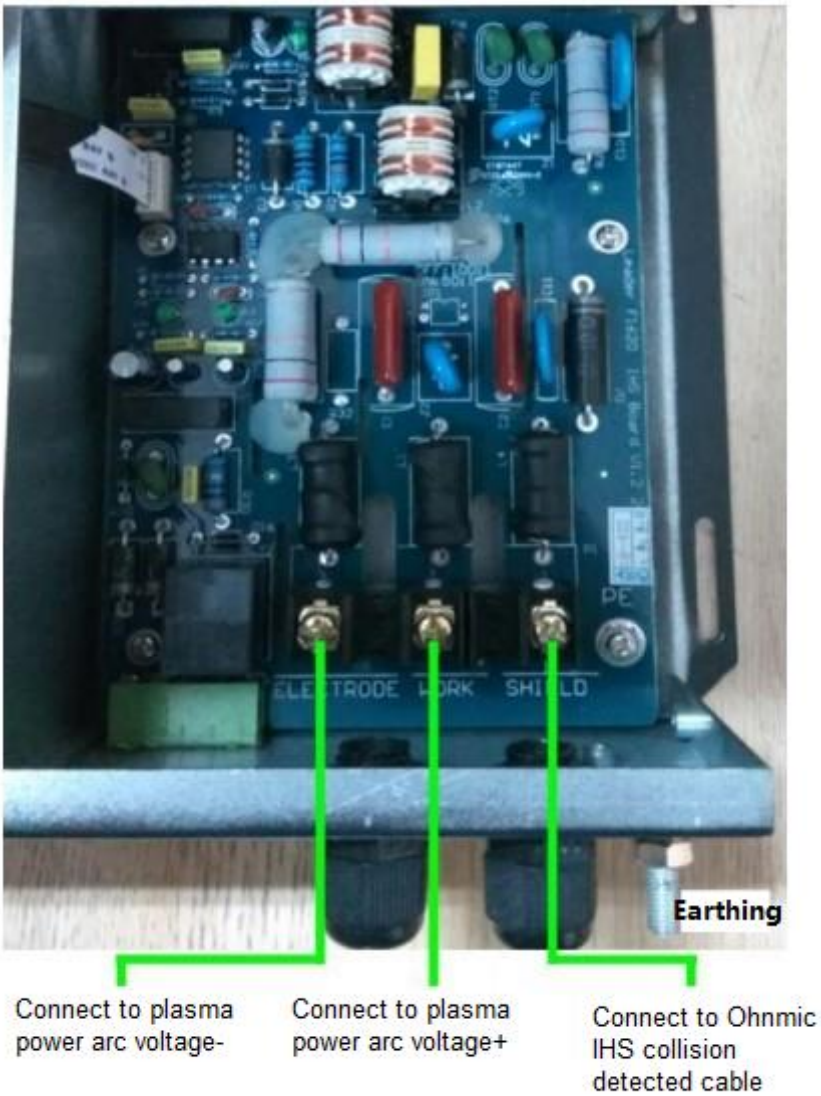

Figure 3.9 Connection of voltage divider Interface

When the height controller detects the plasma arc voltage, the voltage dividing circuit is adopted to detect, and the arc voltage output by the plasma is input to the height controller host after being divided by 100: 1. As shown above:

The ELECTRODE terminal (screen printed word ELECTRODE on PCB board) is connected to the negative electrode (cathode) of plasma arc voltage;

The WORK terminal (screen printed word WORK on PCB) is connected to the positive electrode (anode) of plasma arc voltage;

SHIELD terminal (screen printed word SHIELD on PCB) is connected to the collision detection lead of protective cap.

The anode of the plasma power supply is grounded, the cathode is connected to the nozzle of the cutting torch, and the voltage on the nozzle is negative. During cutting, the absolute value of arc voltage is generally greater than 100V V. Due to high voltage and large interference during Arcing, isolated voltage division is necessary for control. The voltage divider of the height controller adopts a 100: 1 voltage divider circuit, and the arc voltage that can be measured is in the range of 0v to 660v.

Note: High voltage shielded cable is required for plasma power supply arc voltage sampling cable, and the anode and cathode must not be connected in reverse. If the positive and negative electrodes of arc voltage are connected in reverse, the Automatic adjustment is invalid. The arc line of plasma power supply shall be led out from the connection post at the rectification output end of plasma power supply, and shall not be led out from the cutting torch and workpiece to prevent high frequency interference.

3.2 F1627D(S), F1628D(S), F1629D wiring diagram

3.2.1F1627D(S), F1628D(S) controller view

Figure 3. 10 F1627D chassis and voltage divider view

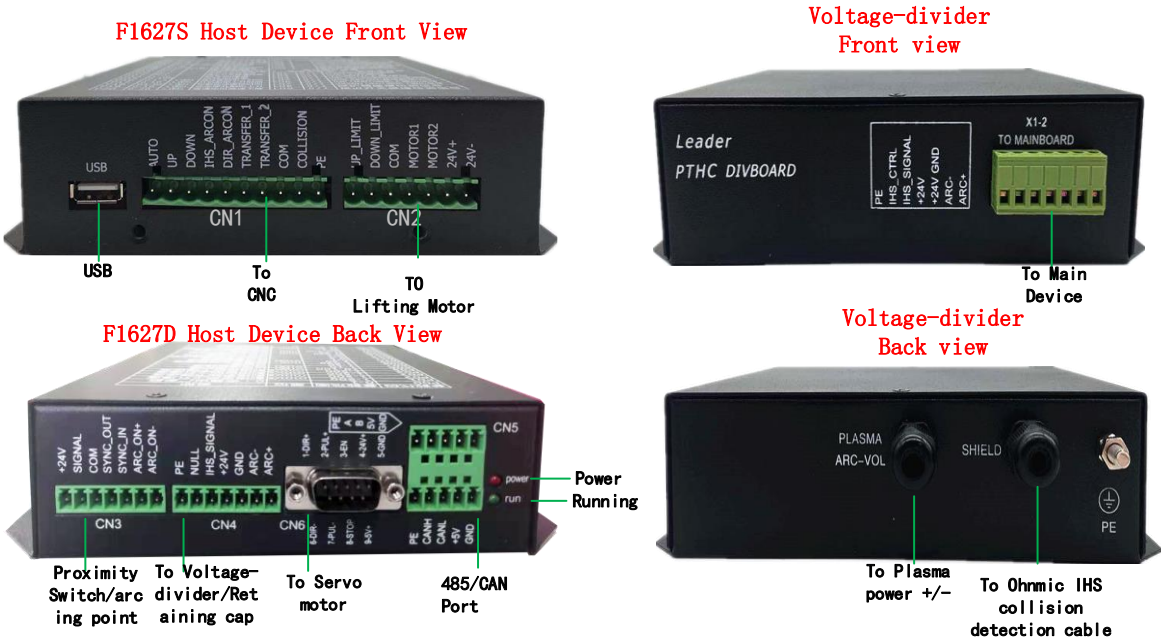

Figure 3. 11 F1627S chassis and voltage divider view

Figure 3. 12 F1628D chassis and voltage divider view

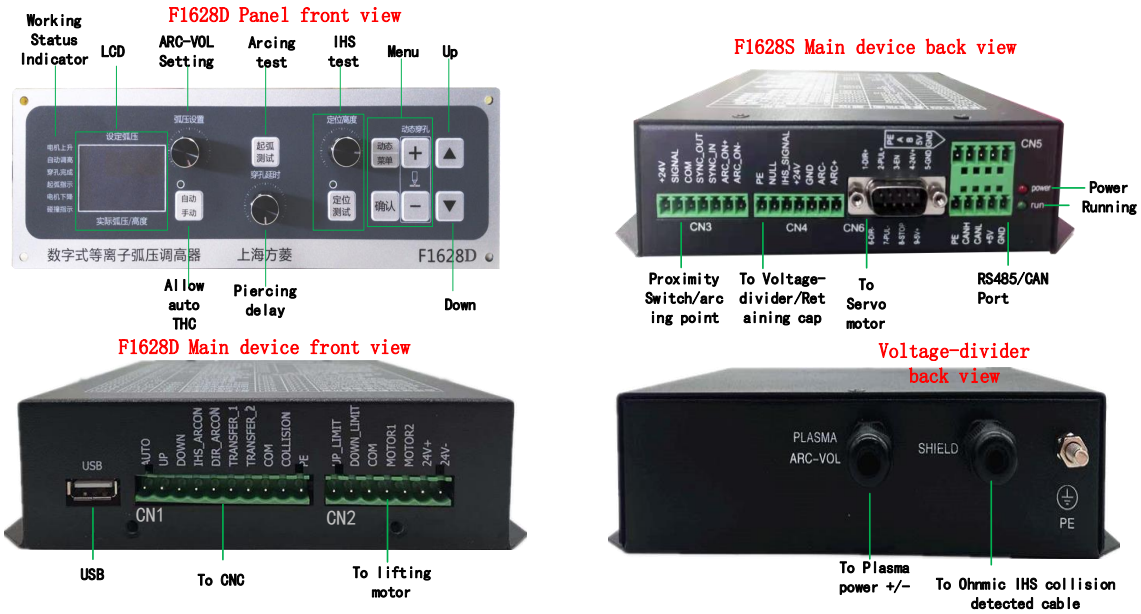

Figure 3. 13 F1628S chassis and voltage divider view

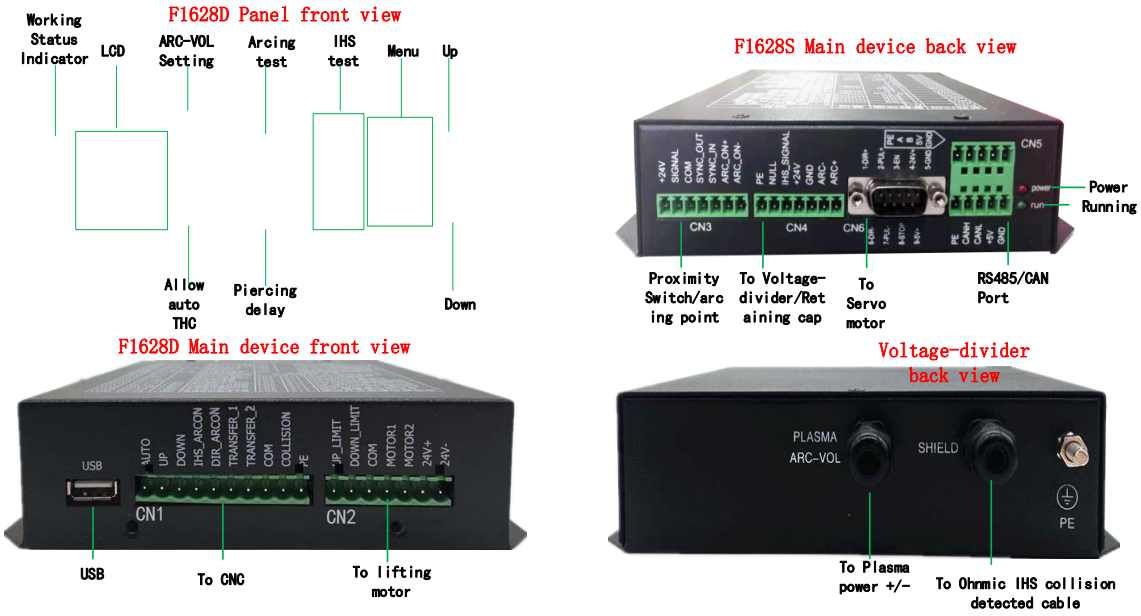

3.2.2 F1627D(S), F1628D(S)/F1629D General Wiring Diagram

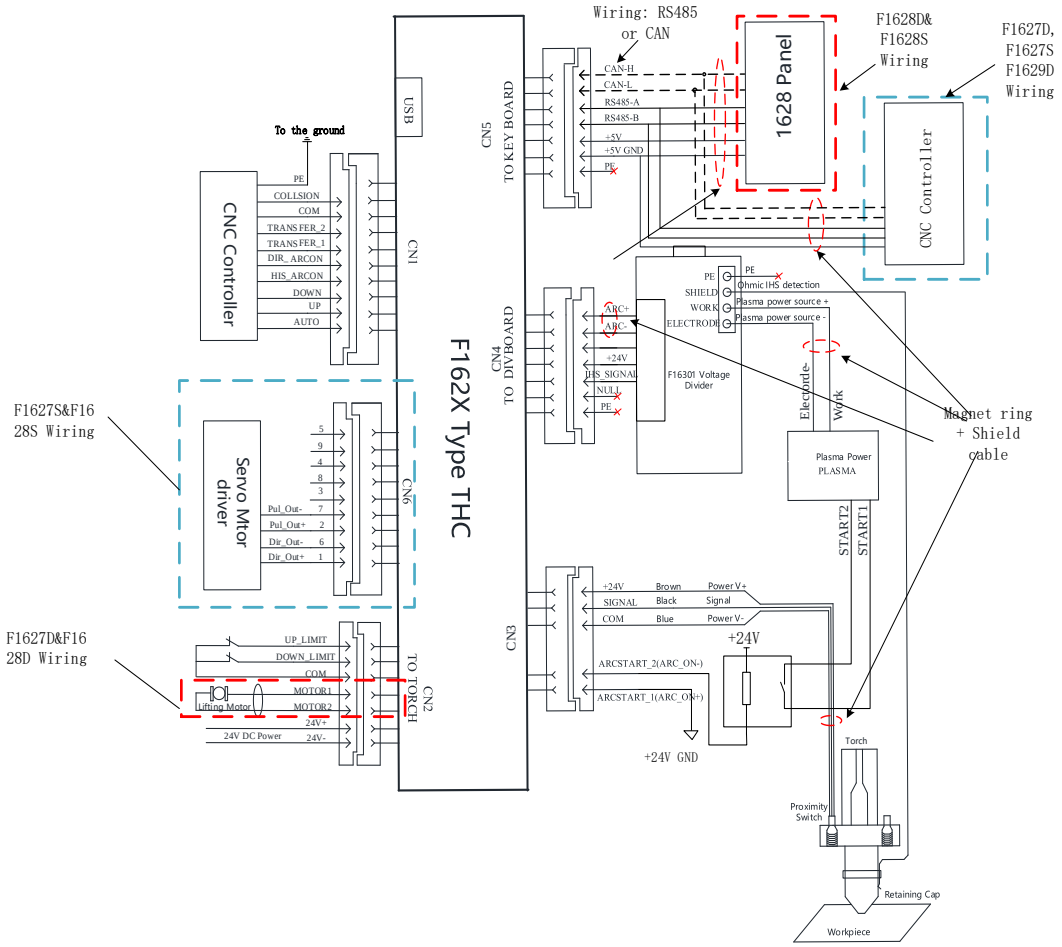

Figure 3. 14 F1627D(S) and F1628D(S)/F1629Dgeneral wiring diagram

3.2.3 CNC Interface CN1

It is the same as the F1620 numerical control interface in Section 3.1.3.

3.2.4 Power supply, DC motor and motor limit interface CN2

The wiring of the F1627D and F1628D height controllers is the same as that in section 3.1.4.

3.2.5 Stepper motor interface CN6

F1627S and F1628S wiring:

This series of height controllers are connected to the stepper motor driver through a 9-core plug, and further connected to the stepper motor. The pins are defined as follows:

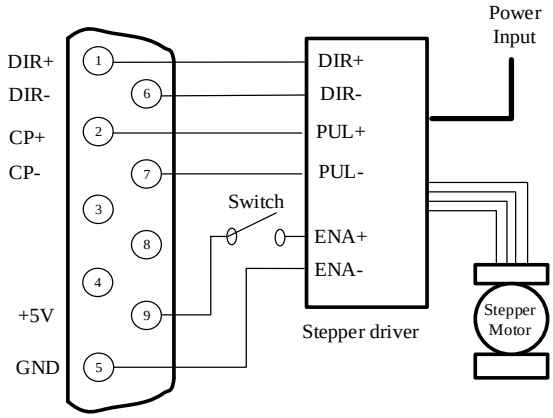

Figure 3.15 Stepper Motor Interface

Table 12 Step Motor Interface Description

Pin No.	Signal	Content
1	Dir_Out+	Positive direction
2	Pul_Out+	Positive pulse
3, 4, 8		None (empty pin)
9	+5V	Positive pole of DC 5V power supply
5	+5VGnd	Negativepole of DC 5V power supply
6	Dir_Out-	Negative direction
7	Pul_Out-	Pulse negative

3.2.6 Proximity switch and plasma arcing interface CN3

The proximity switch and plasma arcing interface in Section F1620 of Section 3.1.5 are the same.

3.2.7 Voltage divider Interface CN4

The 1627D, F1627S, F1628D and F1628S arc voltage height controllers need to be connected with plasma arc voltage through external voltage dividers F16301 and F16305, and can be positioned with protective cap by F16301.

The 7-core socket is connected to the chassis of the voltage divider, and the to div board and the voltage divider X1-2 are connected through a 7-core shielded cable. The pins are defined as follows:

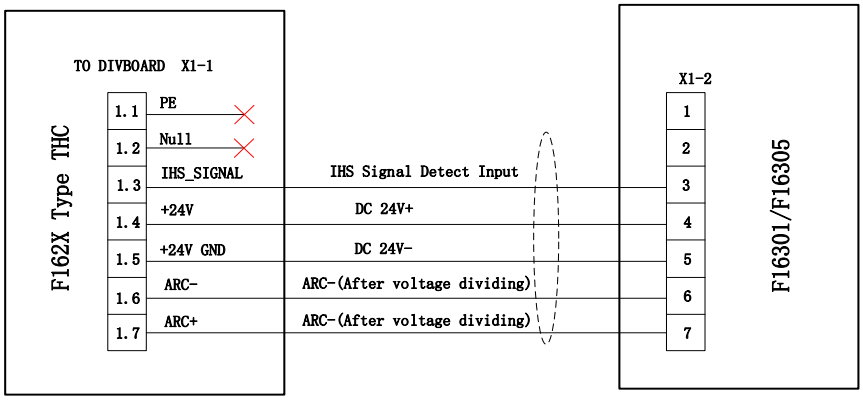

Figure 3.16 connecting the height controller and the voltage divider port

Note:

1) The voltage divider does not need to be connected to another power supply. It provides 24V DC power supply through the height controller host.

2) Shielded cables must be used for the connection between the upr host and the voltage divider. The shielding layer of the shielded cable can be grounded on the height controller side or the voltage divider side. It is recommended that the shielding layer be grounded on the voltage divider side.

3) Refer to Section 3.1.6 Arc Voltage and Protective Cap Interface for the wiring of the F 16301 and F16305 sub-platens and plasma power arc voltage.

3.2.8 Interface of collision detection circuit for protective cap of sub-platen

This series of height controllers can adopt two positioning methods for initial positioning:

I. Positioning mode of proximity switch: connect with proximity switch through F162X height adjustment controller CN3, refer to section 3.1.5.

II. Collision detection and positioning method of protective cap: CN4 of F162X height adjustment controller is connected with F116301 voltage plate, and F116301 is connected with protective cap part of plasma cutting torch.

Figure 3.15 shows the wiring method of F16301 and plasma cutting torch protective cap:

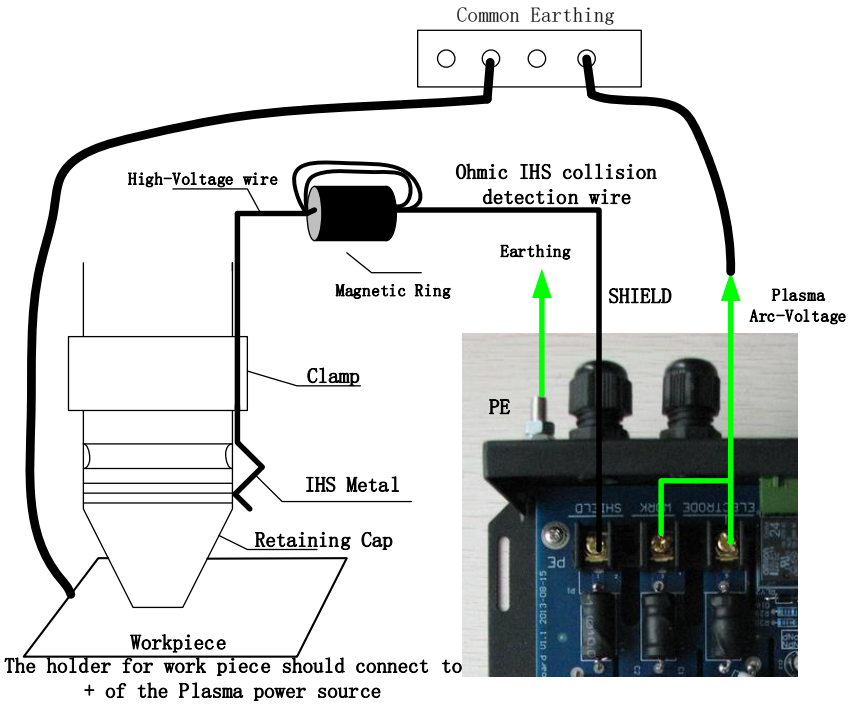

Figure 3.17 Schematic Diagram of Collision Detection Wiring for Protective cap of Voltage divider

The working principle of the collision detection and positioning mode of the protective cap: after the height controller receives the arcing signal from the numerical control system, the cutting torch descends first. When the protective cap contacts the workpiece, the height controller immediately controls the cutting torch to ascend, and the positioning is completed when it ups to the set height.

In actual use, the following matters should be paid attention to:

1) During wiring, the high-voltage wire passes through the threading hole from the terminal silk-printed as SHILED on the sub-pressing plate, and then is connected to the protective cap. At the same time, a magnetic ring can be wound around the high-voltage wire at a position close to the sub-pressing plate, and the high-voltage wire can be wound on the magnetic ring several times more, which can effectively prevent the high-frequency interference of plasma arc voltage.

2) The cutting rack and workpiece must be short-circuited with the anode of the plasma power supply, and the circuit must be guaranteed to have low impedance. Usually, the wiring can ensure this, and no special treatment is required, because the short circuit is already ensured when the anode of the plasma power supply is connected to the workpiece.

3) the grounding column PE must be well grounded, and the cross-sectional area of the grounding conductor is $>4mm^2$.

4) The contact resistance when the protective cap contacts the workpiece must be <1kΩ, otherwise the protective cap collision detection circuit will be unable to operate due to too large impedance. This is especially important for rusty steel plates. If the steel plates are seriously rusted, the surface of the steel plates should be cleaned before cutting to remove impurities in the rusted layer. The protective cap collision detection circuit only needs one collision detection signal line, and the loop uses the lead wire for arc voltage sampling. Therefore, a high voltage cable is saved.

Note: the protective cap collision detection circuit and the proximity switch detection circuit can work at the same time, and the collision signal detected by either of the two methods can complete positioning. Generally speaking, the positioning signal of the protective cap will be triggered first to complete the positioning. However, if the workpiece is rusted and oxidized or insulated with a protective layer, the positioning of the protective cap is invalid. If the positioning of the protective cap cannot be completed, the proximity switch will be used as backup protection to complete the positioning.

The positioning of the protective cap will work as long as the wiring is correct and the parameter P21 is set to 1. At the same time, the proximity switch can also be used according to the parameter selection. When the parameter P13 is set to 1, the proximity switch collision detection is used.At this time, the proximity switch needs to be connected.

3.2.9 1628D and F1628S type height controller panel interface

The panel of 1628 type height controller is connected to the main machine through a 5-core wire, and the power supply of the panel is also through this 5-core wire, so the length of the wire cannot be too long. If the distance is long, it is recommended to use a wire with down impedance. The connection method has to be either RS485 or CAN.
Wiring Diagram of 1628 Type Height Controller Host and Panel 3.16:

Connection method: RS485

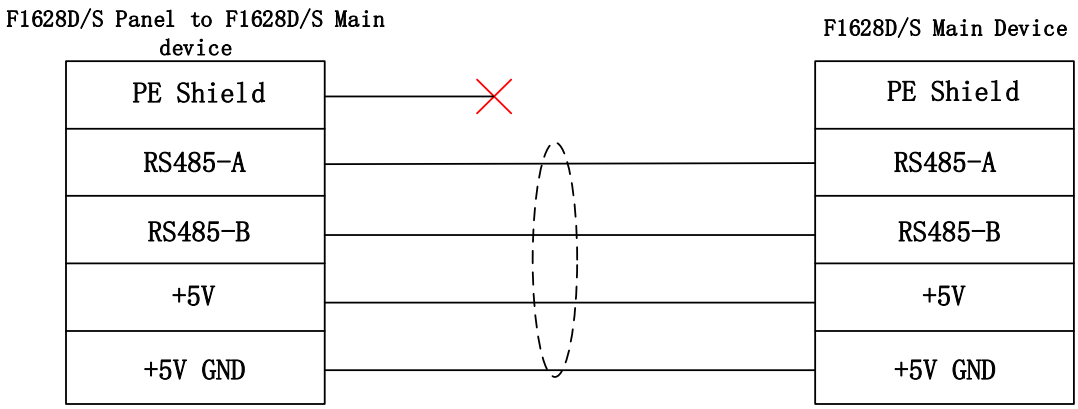

Connection method: CAN

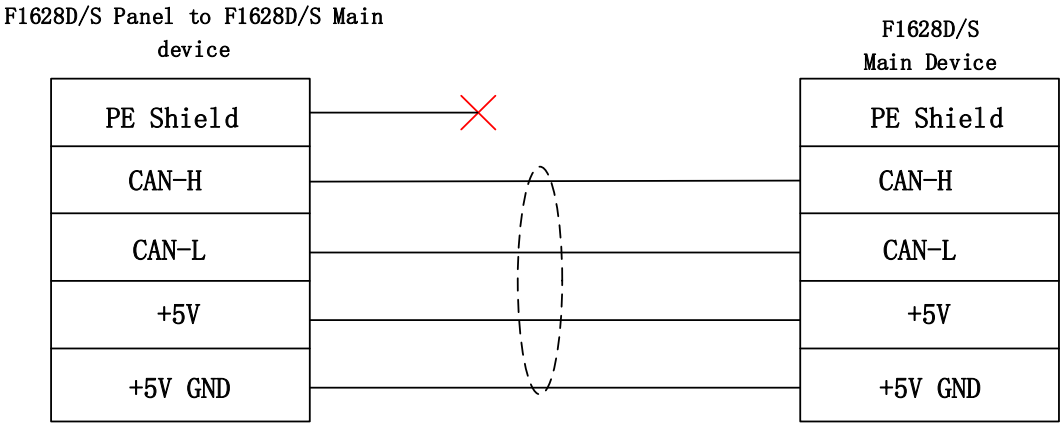

Figure 3.18 Wiring Diagram of Main Engine and Panel

3.3 USB port upgrade

This series of height controllers have firmware program upgrade function. Users can use the U-disk, plug it into the USB port, and upgrade the firmware program of the height controller.

3.3.1F1620 and F1627D, F1628D, F1629D upgrade methods:

1) Copy the firmware program to the root directory of the USB flash drive. F1620 uses "F1620.bin", F1627D, F1628D and F1629D use "F1628.bin".

2) Turn off the power of the height controller, and then insert the U disk.

3) Power up the height controller. After the power-up of the height controller is turned on, the green digital tube displays "F20". The red digital tube has a 3-second countdown. Before the countdown ends, press the【Menu】to enter the upgrade mode. At this time, the green digital tube displays "UPD" and blinks, indicating waiting for confirmation of upgrade. If you do not press the 【 Menu 】 before the countdown ends, you will enter the normal working state after the countdown ends. if you do not press the 【Menu】but press the【+】before the countdown ends, the height controller will skip the countdown directly and enter the normal working state.

4) Press the 【Menu】 key to enter the upgrade mode, and the green digital tube will display " UPD" and flash to indicate waiting for upgrade. At this time, press the 【Confirm】 to start the upgrade. At this time, the green digital tube displays "UPD" but no longer flashes, while the red digital tube displays the upgrade progress in digital form. Display 8 indicates that the program has been updated by 8%, and display 16 indicates that the program has been updated by 16%.

5) Press the 【Menu】 key to enter the upgrade mode. If you press the 【+】 instead of the 【Confirm】, the height controller will directly skip waiting for the upgrade and enter the normal working state. If you do not press any key while waiting for the upgrade, after 20 seconds, the height controller will end waiting for the upgrade and enter the normal working state.

6) When the red digital tube is displayed as 100, the upgrade progress reaches 100%, and the upgrade has been successful. After the upgrade is successful, the green nixie tube displays "SUC" and blinks for 3 times, then automatically restarts the height controller.

7) After the upgrade is successful, there is no need to do any operation. The height controller will restart automatically and then enter the normal working state after 3 seconds countdown.

8) After the height controller is restarted and enters normal operation, the U disk can be pulled out. After upgrading the firmware program of the height controller, the originally set parameters will not change and will still be used normally.

3.3.2F1627S and F1628S upgrade methods

1) Copy the firmware program to the root directory of the U disk, and the upgrade file name is "F162XD.bin".

2) Turn off the power of the height controller, and then insert the U disk.

3) Enter the height controller diagnosis interface in the CNC interface and follow the prompts.

3.4 Wiring Examples

3.4.1F1620 and Shanghai Fangling F2000 series CNC wiring

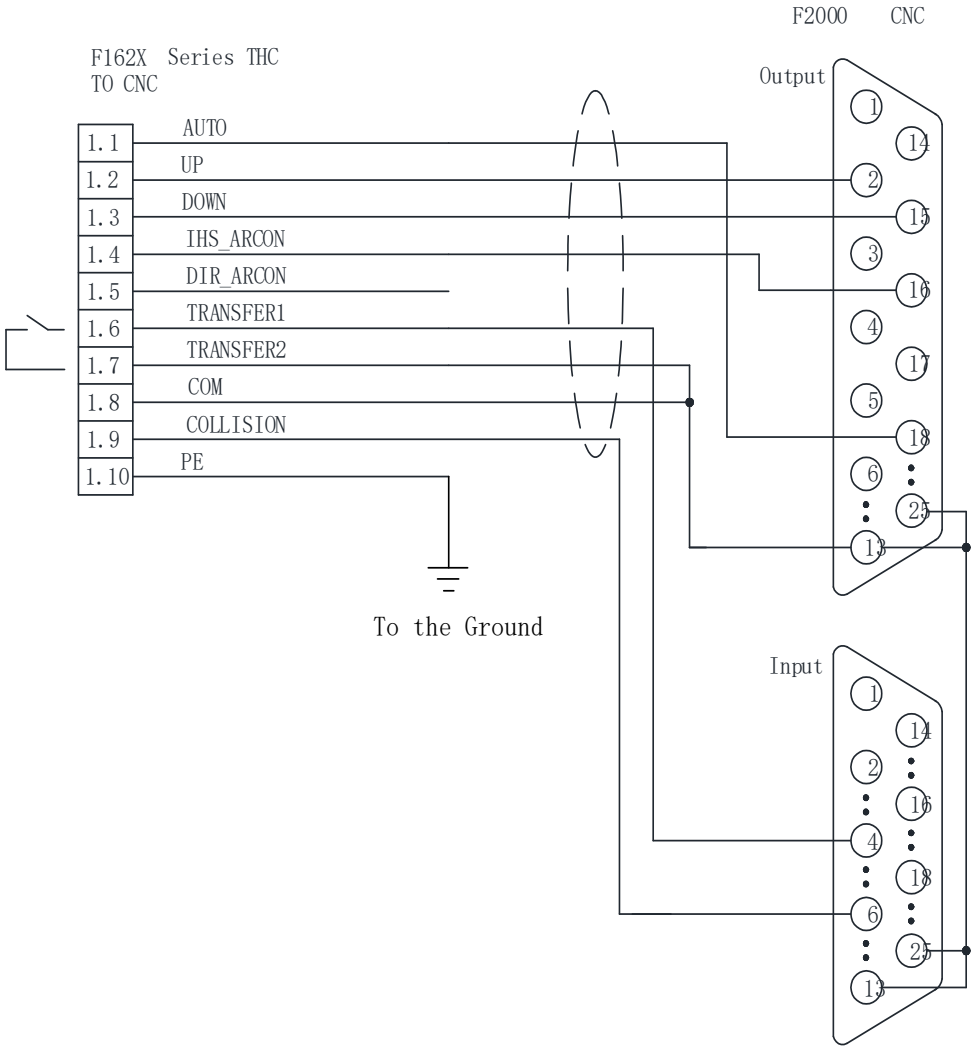

Figure 3.19 Schematic diagram of connection with Fangling CNC F2000 series

3.4.2 F1620/F1621 and Shanghai Fangling F7000 series CNC wiring

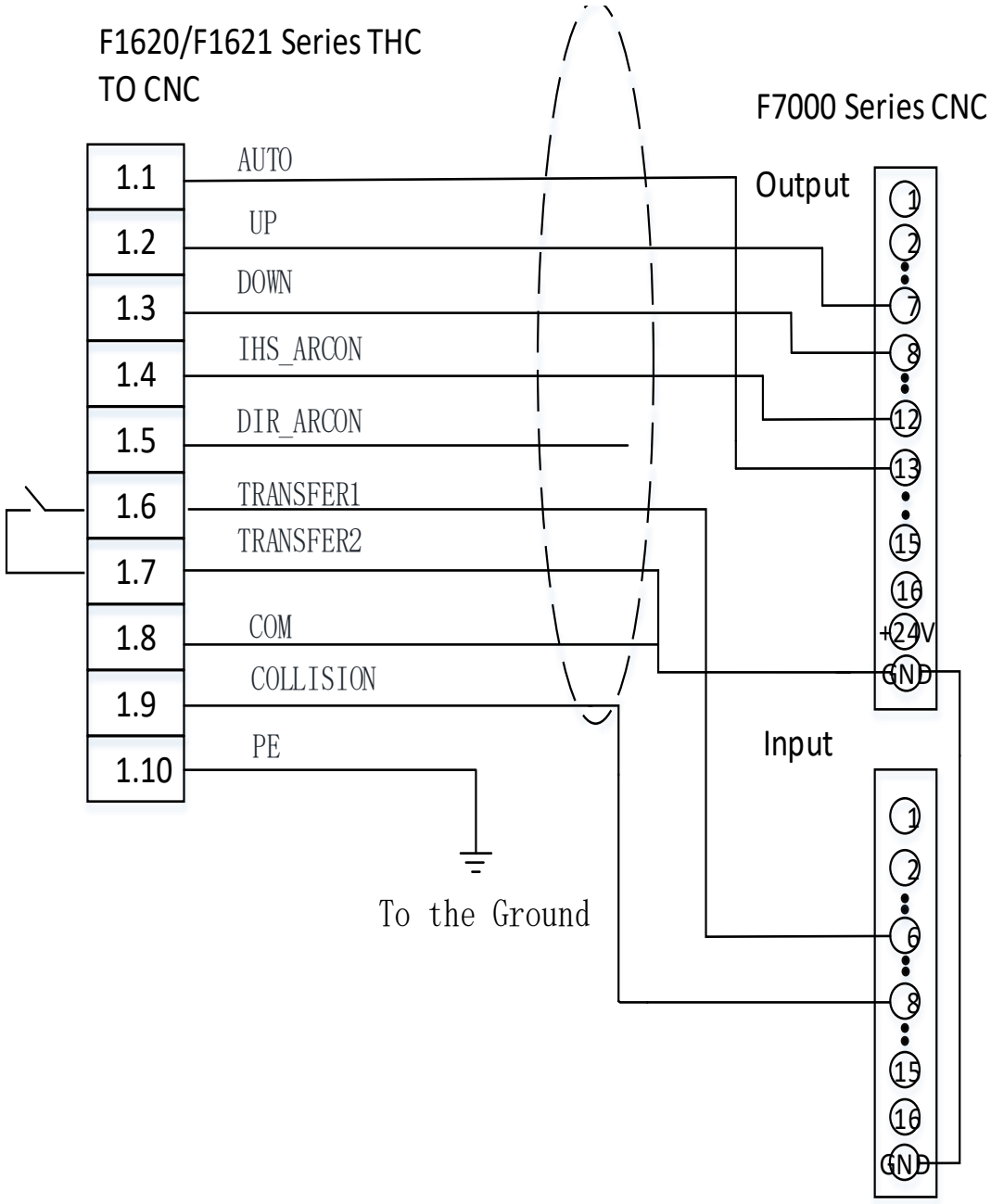

Figure 3.20 Schematic diagram of connection with Fangling CNC F7000 series CNC

3.4.3 F1627D/S and Shanghai Fangling F7000 series wiring

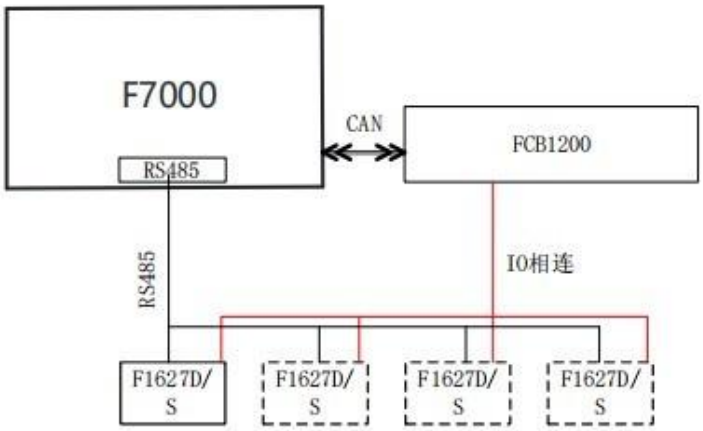

Note: All can only be the same type of F1627D or F1627S
Figure 3. 21 F1627D/S and Shanghai Fangling F7000 series wiring diagram

3.4.4 F1627D/S, F1628D/S, F1629D and Shanghai Fangling F2000 series wiring

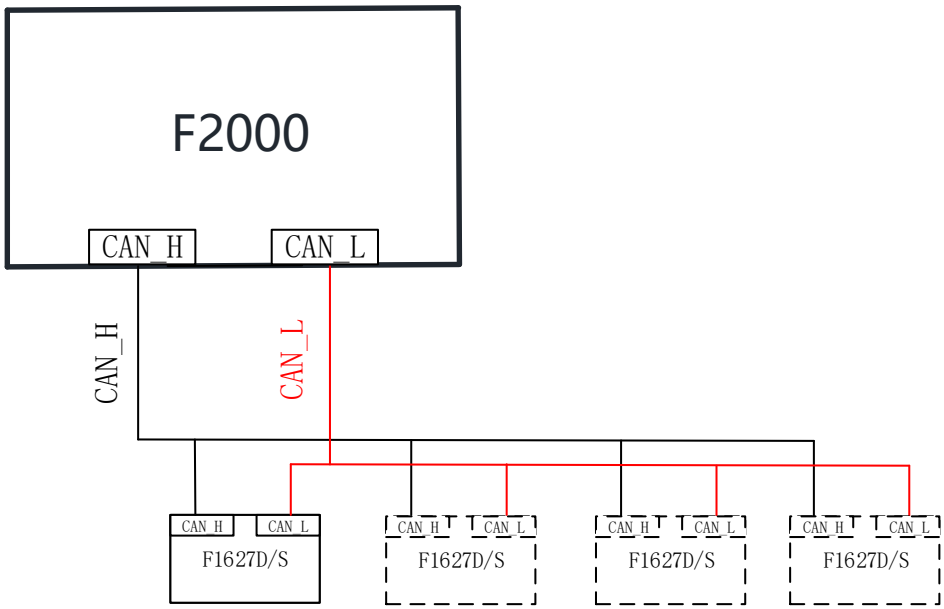

Note: All THC must be same model, 1627D(Applies to F1628D/S, F1629D)
Figure 3. 22 F1627D/S, F1628D/S and F1629D and Shanghai Fangling F2000 series wiring diagram

Chapter 4 FAQ

In the process of use, the possible failure phenomena and solutions are as follows:

No.	Fault phenomena	Reason	Solution
1	Display is not working	Power supply is down	1. Check the connection of Power supply

2	Motor is not working	Limit signal may lock it down	1. Check the up/down limit signal 2. Over-current protection may Lock the motor chips down.
3	Motor is working but get blocked again	Motor chips have over-Current protection	1. Check the mechanical structure Is locked down or not.
4	After THC is on, the motor keep rising	The collision signal cause that	1. Check the connection of proximity switch, check the parameter P13, L08 or L09 is set correctly or not. If the setting all correct, please make sure the red light on the proximity switch is on before it goes off. 2. Check the condition of proximity switch. 3. Check the connection between retaining cap. When the torch is not touching plate, the collision signal should not be there.
5	Arc-Voltage Control is not stable		1. Check the grounding. 2. Check the plasma power, the cooling liquid is leaking or not.
6	The arcing activate before the IHS is done	It usually happened when under the control of the direct arcing signal	1. Extend the IHS time of CNC
7	The arcing cannot start after its IHS	The plasma power ssource doesn't work, or the arcing relay doesn't close.	1. Disconnect the wiring between THC and arcing relay, then short-circuit the arcing wiring on the a pow See your power source can arcing normal or not. 2. If your plasma power source is in good condition, check the arcing relay on your THC.
8	The torch can't light up		1. Check the plasma power source working condition 2. Check the IHS Height is too high or too low. 3. Check the cutting consumable. 4. When using the retaining cap, the slug may spurt to the torch cause the short circuit.
9	When the CNC start cutting, the torch falls to the plate	The arc voltage is too high	1. Increase the setting arc voltage. 2. Increase the auto THC time on CNC. 3. Check the corner signal on CNC or auto signal. The auto THC signal should not be sent on the beginning of the cutting
10	The arcing is off as soon as the piercing moves to the next hole		1. The delay time is too long. (Before the CNC moves, the arc will be off easily if your torch stay at the position of pierce too long).
11	Auto IHS, the torch won't lift up after it hit the plate	The collision signal wasn't sent or IHS height	1. Check the collision signal works normally or not (Check the working status of proximity switch or retaining cap). 2. Check the IHS height time setting is too small.
12	The torch easily hit the plate during the cutting.	The setting voltage is too small.	1. Increase the setting arc voltage.
13	The torch shaking during the height control.	Sensitivity is too high	1. Lower the parameter P07 Sensitivity.
14	On the steep bevel, the cutting voltage is hard to be track.	Sensitivity is too low. The speed of lifting motor is too slow	1. Increase the parameter P07 Sensitivity. 2. Switch to a faster speed lifting motor.
15	The CNC doesn't pause when the arc	After arc break alarm, the voltage did not	1.The CNC could get the arcing signal feedback from the plasma itself.

	break during the cutting process.	go down cause the THC still getting the voltage.	
16	The screens shows “LIC” after power up	The data storage has an error	1. Please return to supplier for repair.
17	During the upgrade, The device no respond after press Enter	The reading speed of the USB doesn’t match	1. Restart your device and re-upgrade. 2. Change to the another USB drive.